DESIGN FOR THE PEOPLE

dftp

Design made to last

2022/2023

LINEN
KERRY JOYCE THE INTANGIBLE
PAINTING BEYOND POLLOCK
AD at 100

Collection 22/23

The 2022 collection from Design For The People marks the start of something new. We are delighted to present four new design collaborations with Danish designers that all contribute with new, creative designs in high-quality materials and new perspectives on the Danish design tradition. Our proud, lasting collaboration with many of our familiar designers continues to evolve into great designs and development of existing series.

The inspiration for this year's novelties comes from vintage Italian designs, where iconic silhouettes and distinctive and playful details are key.
We explore elements from the contemporary Japandi-style where the balanced Japanese aesthetic meets the sleek, modern lines of the Scandinavian design tradition. We have been focusing on recognizable and organic shapes, geometric structures, and new materials such as Tyvek, that our designers have combined in new, exciting ways. However, the collection is still anchored in the Scandinavian minimalistic style with classic designs, mixed materials, and matt silky surfaces.

We strive to create timeless designs you will value for years to come. Items that are made to last and will become classics that can stand the test of time. The use of quality materials such as marble, opal glass and brass, combined with the use of natural colours and thought-out designs are the fruits of innovative thinking that enhances our lives and the spaces surrounding us.

For many decades, Danish design has received great recognition throughout the world. This year we have been honoured with yet another of the much-coveted Red Dot Design Awards for the beautiful Mobile pendant, designed by Maria Berntsen.

We proudly present our beautiful new collection - Design made to last.

Lone Bødker
Product manager

Table of contents

06 *Our design team 2022/2023*

08 *Red Dot Design Award*

12 *Asger Risborg Jakobsen*

16 *Anker Studio*

24 *Bjørn+Balle*

32 *Bønnelycke MDD*

42 *Charlotte Høncke*

52 *Maria Berntsen*

64 *Sofie Lèfevre*

74 *Collection 2022/2023*

138 *Product index*

147 *Contact information*

Arcello p. 26

Beau Pendant p. 72

Mademoiselles p. 66

Kaito p. 36

Tullio p. 22

Asger Risborg Jakobsen

Bønnelycke MDD

Bjørn + Balle

Charlotte Høncke

Maria Berntsen

Our 2022/2023 design team

Anker Studio

Sofie Lèfevre

"Thanks to its easy-to-use mechanism, Mobile allows light to be distributed as needed while at the same time offering an impressive glare-free pendant luminaire."

Statement by the Red Dot Design Jury

Red Dot Design Award

The Red Dot Award is one of the most recognized international design contests in the world and has been a quality stamp in the design industry since 1955.

Each year, Red Dot receives more than 17,000 entries from close to 60 countries, which will subsequently be reviewed and judged by a jury of 40 independent design experts.

The price is divided into three categories: Product Design, Design Concept and Communication Design. Red Dot is organized by Design Zentrum North Rhine Westphalia in Essen, Germany.

reddot winner 2022

Mobile Pendant by Maria Berntsen

Red Dot Design Award Winner 2022

Lookbook
2022-2023

“I believe that instead of making trendy objects we should try to make objects that outlive trends”

Asger Risborg Jakobsen
Studied architecture at The Royal Danish Academy in Copenhagen

Based in Copenhagen, Denmark

Asger Risborg Jakobsen

Even as a child Asger Risborg Jakobsen found joy in creating all kinds of tools that he played with in the fields and trees around his home. Later Asger chose to make his passion his way of living by studying architecture at The Royal Danish Academy in Copenhagen. After three years he felt the joy of designing fading away and needed a change.

This time, he wanted to try something completely different. Asger started studying medicine and quickly became fascinated with the architecture of the human body. He gradually rediscovered his joy of designing and now combines working in both fields. In his creative work, Asger finds inspiration in the simultaneous complexity and simplicity of nature – and he is driven by creating designs that outlive trends and that can endure everyday use over many years.

"I find lighting fascinating. It is both a practical and essential tool that enables us to unfold our lives after the sun sets. At the same time, it is an aesthetic element that affects us and our surroundings. It transforms the appearance of materials and shapes. It changes the atmosphere. Everything changes with the light."

With his strong focus on longevity in terms of durability, functionality and aesthetics, Asger Risborg Jakobsen is not subject to short-lived trends and tendencies.

"I believe that instead of making trendy objects we should try to make objects that outlive trends. The objects we make will of course always reflect our time and in this way, nothing is genuinely timeless, but I aim to create contemporary classics."

Watch the full ambience video
to explore the Hill series

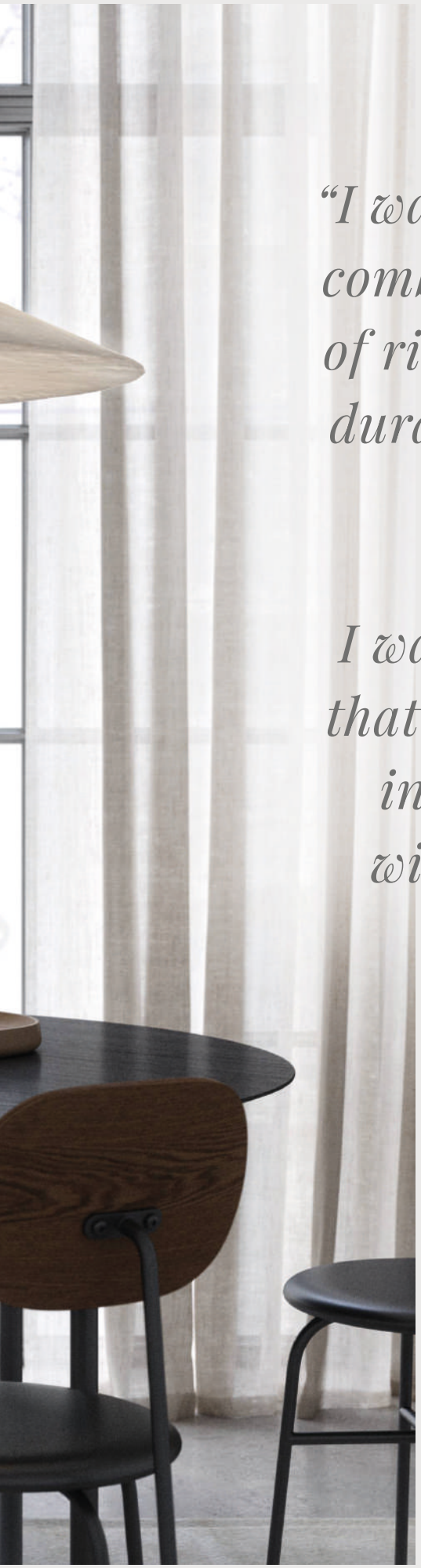

“I wanted to create a lamp that combines the delicate qualities of rice paper lanterns with the durability to endure everyday use over many years.

I wanted to create a big lamp that could diffuse a lot of light in a comfortable way, but without blocking the view”

Asger Risborg Jakobsen

Hill

Hill is a large, geometric lampshade that fills the room without blocking the view. Created by Danish designer Asger Risborg, Hill is light as a cloud, but sharp as a rock. A lamp that is both complex and simple while creating a very soft light that spreads into the room in a calm, uniform way.

Learn more about Hill on page 119

Anker Studio

Anker Studio
Consists of designers Christian Troels and Jonas Birkebæk Poulsen both educated from Design School Kolding.

Based in Svendborg, Denmark

Danish design duo Anker Studio consists of Jonas Poulsen and Christian Troels Hansen. Both have been interested in creating and designing since childhood, which has resulted in a curious approach and a strong creative power in everything they do.

Jonas and Christian each take on different roles while working closely together. Their collaboration often helps them overcome the challenges that come up during the design process.

“When you’re two people working together, you’re forced to say what you’re thinking about out loud. That way it becomes real, and it forces you to make up your mind about it to a greater extent than when it’s just thoughts in your head. When you articulate your problem out loud, you often find another perspective on the solution.”

For Anker Studio, good design is a design that people remember and fall in love with. Something that is part of a bigger story and that will be cherished for years. When working with lighting, Jonas and Christian find the balance between functionality and aesthetics fascinating.

“The best thing about working with lighting is that is has a large range between functionality and art. Some lamps are only functional, while some are more emotionally and aesthetically driven. The emotionally driven pieces become like an art object in the home. That’s what makes the work fun. There’s room for differences”.

“Some lamps are only functional, while some are more emotionally and aesthetically driven.

The emotionally driven pieces become like an art object in the home. That’s what makes the work fun.

There’s room for differences.”

Anker Studio

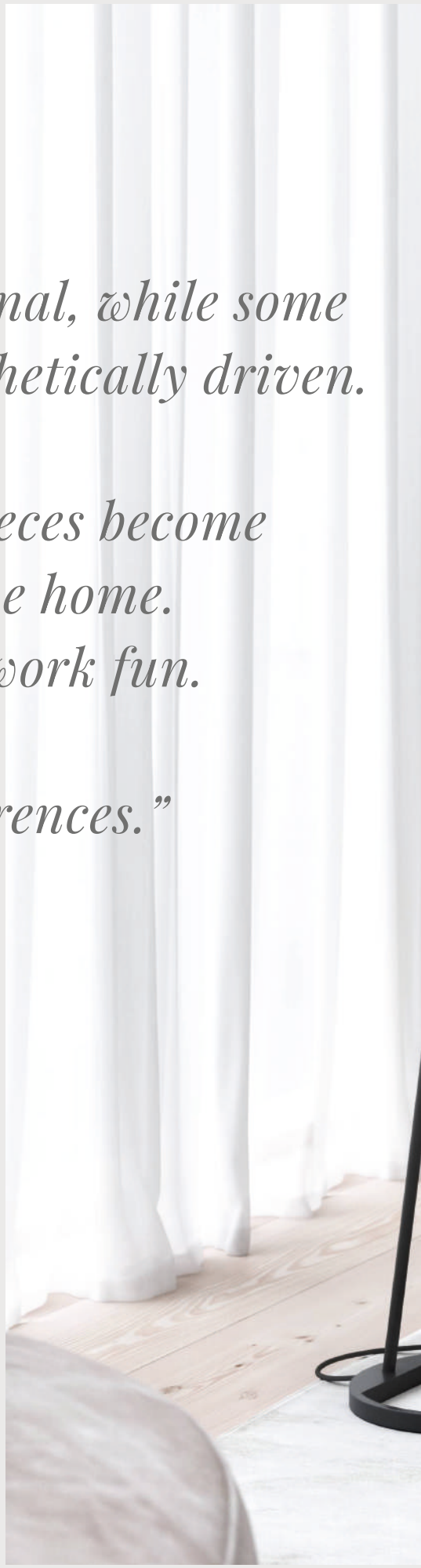

Versale Floor, Black 2220064003

Versale Table, White 2220075001

Versale

The Versale series by Anker Studio is the epitome of Scandinavian minimalism cut to the very core. A perfectly round shade with a uniform light surface only disturbed by the piercing frame.
The whole series can easily create the perfect ambience anywhere you need a pleasant, glare-free light.

Learn more about Versale on page 112

Versale Pendant, Brown 2220053009

Watch the full ambience video
to explore the Tullio series

Tullio

The Tullio pendant by Danish designers Anker Studio has a soft and arched mode of expression - recognisable shapes put together in a new, interesting combination. The three round shades are elegantly placed together creating a grand and sculptural design. Diffusers ensure a uniform light surface and a glare-free light.

Learn more about Tullio on page 126

Rune Balle & Christian Bjørn
Consists of designers Christian Bjørn and Rune Balle.
The duo has carried out a large number of creative
design tasks for both national and international clients

Based in Copenhagen, Denmark

“Quiet is better than loud. We like to create designs that are very simple. Designs that people feel safe about”

Bjørn+Balle

The designers combine minimalistic Scandinavian design with international trends. It’s about image creation and recognizability. The overall identity of the product is its form, function, details, structure and materials, which all comes together. A product never stands alone but is part of an environment where the story being told supports the design.

Bjørn + Balle have both carried out a large number of design tasks for both national and international clients at many different areas, such as product design, furniture design, interior design, identity programs and exhibitions, and together they have great success with lighting design.

Bjørn + Balle has delivered a wide range of innovative technical solutions for the industry, as well as beautifully designed products for the consumer market.

Arcello Portable, Antrazite 2220155050

Arcello

With Arcello Danish design duo Bjørn + Balle has created an elegant portable light with a pleasant, downward facing light. The design is simple, yet distinct with a beautiful, uniform anodized surface from top to bottom. The lamp is easily charged with the included USB cable.

Learn more about Arcello on page 128

Arcello Portable, Brown brass 2220155061

Norbi

Danish design duo Bjørn + Balle has created Norbi. A minimalist pendant with an industrial touch. The matt shade is contrasted by a brushed steel detail that enables the shade to move up and down. Moving the shade up creates a diffused light that spreads into the room, and moving it further down centres the light downwards - creating the perfect lighting for different situations.

Learn more about Norbi on page 121

Blanche Floor, Brass 2120794035

Blanche 42 Pendant, Brass 2120773035

Blanche

The Blanche series by Bjørn + Balle is carried out in a classic design with elegant art deco references. Brushed brass details encircle the opalized diffuser that emits a soft light both upwards and downwards. The slim design makes the pendant perfect above a dining table. Dimmable for obtaining the perfect light for every situation.

Learn more about Blanche on page 78

Blanche 32 Pendant, Brass 2120753035

Bønnelycke MDD
A Multi-Disciplinary Design company
with a desire to work constructively and innovatively

Based in Aarhus, Denmark

“Great design is giving people what they want, and a little bit more”

Learn more about the designer

Bønnelycke MDD

Bønnelycke MDD was established in 1988. Driven by a nosurpressable urge and desire to work constructively and innovatively, Bønnelycke mdd started his career with the design of lamps, furniture and interior decorating.

Quickly, he became known as an unconventional architect with no whims and fancies. His ability to challenge and optimize the manufacturing process itself is to be found in Henrik’s original professional background as a toolmaker. ”It could be fun” and ”of course it can be done” – are phrases often used in his company.

From day one, the core of his work has been to create products simply because they are needed. Designs by Bønnelycke MDD grow out of a specific need or requirement expressed by the customer – and by the general public as such. This has resulted in a comprehensive portfolio of projects and designs allowing the company to slowly but steadily expand over the years.

Nomi Wall, Black 2220171003

Nomi Floor, Black 2220194003

Nomi

In the Nomi series, there is an obvious ease between the simple frame and adjustable lamp head. In this series, designer Henrik Bønnelycke has combined the minimalistic shape with innovative LED technology in a very convincing way. A beautiful aesthetic design language with the slim frame and robust base makes Nomi admirable, and will surely create joy year after year.

Learn more about Nomi on page 90

Nomi 5-pendant, Black 2220163003

Kaito Pro Ceiling, Black 2220526003

Kaito Pro

With Kaito Pro, Bønnelycke MDD has created a ceiling fixture that breaks with tradition. Here design and innovation merges into something greater. The shape stands out as sharp, modern and as a uniform, luminous surface. The functional kip joint in brass adds an elegant superiority to the design.

Learn more about Kaito Pro on page 134

Nobu

Nobu is a reinterpretation of the classic architectural lamp, where the industrial expression and classical form are maintained. Nobu has integrated LED, which contributes to a good light output and simultaneously it is easy and convenient to turn the light on and off with the built-in touch function on the lamp head. In addition, Nobu has a flexible arm and lamp head, so you can direct the light to what you wish to light up. Nobu has lots of applications as both a table base, clamp and wall bracket are included. Nobu is suitable at the desk but can also be used as a bedside lamp or mounted on the wall in the kitchen. Design by Bønnelycke MDD.

Learn more about Nobu on page 131

Nobu Table, Black 2120405003

Nobu Table/Wall/Clamp, Grey 2120405010

Nobu Table, Black 2120405003

Charlotte Høncke

Charlotte Høncke
Holds a degree from Aarhus School
of Architecture in Industrial Design

Based in Aarhus, Denmark

“I like exploring new materials, shapes and techniques and I never choose the easy way out”

Charlotte Høncke has always had a great passion for design and knew from a very early age that she wanted to pursue a carrier in design or architecture. In 2002 she graduated from Aarhus School of Architecture in Industrial Design, and a few years later she chose to become self-employed working with design full time.

Charlotte finds inspiration everywhere she goes – from nature, architecture or travelling the world. New ideas often require new methods for designing and creating which sometimes forces her to explore new ways.

“I like exploring new materials, shapes and techniques and I never choose the easy way out. That sometimes causes challenges, both for me as a designer but also for the manufacturer. But exploring new methods is also what makes the job diverse and exciting.”

Lighting design is something that Charlotte Høncke finds particularly interesting because of its versatility and the need for balancing functionality with aesthetics.

“Besides having to provide the right, functional light, I also think lamps need to be beautiful when turned off. Lamps are one of the elements that bring most atmosphere into the interior, and I personally like to have many different types of lamps in my home to create just the light and atmosphere I want.”

Caché Table, Black 2220275003

Caché

With Caché, Danish designer Charlotte Høncke has created a table lamp with an intriguing and eye-catching design. The lamp is made from two perfectly round shades, united elegantly by a solid marble base. Caché creates an interesting and playful ambience where the light is reflected back and forth between the two shades.

Learn more about Caché on page 129

Caché Table, Grey 2220275010

Hello Table, Brown 2220215009

Hello Table, Black 2220215003

Hello

Hello by Danish designer Charlotte Høncke has a playful and welcoming design language and a classic, organic silhouette. The large shade beautifully embraces the opal white glass dome and can even be turned all the way around for a playful mix between direct and indirect light.

Learn more about Hello on page 130

Hello Table, Grey 2220215010

Maple

Maple is designed by Danish designer Charlotte Høncke and its organic shapes are reminiscent of large flower petals, effortlessly embracing a cosy, evocative light. Maple is perfect above the dining table or in a dark corner that needs brightening up with an airy design that does not feel heavy or dominant in the room.

Learn more about Maple on page 119

Maple Pendant, Black 2220293003

“I’m very proud of Maple. I really like the simple, organic shapes and the way the light unfolds and hits the shades.

It almost resembles large flower petals that embrace the light in an effortless way”

Charlotte Høncke

Maple Pendant, Brown 2220293009

KEITH HARING
ROMANCE

Maria Berntsen

Maria Berntsen
Holds degrees from both
The Royal Danish Academy Art
and L'Ecole d'Architecture

Based in Copenhagen, Denmark

Glossy Table, White 202050501

“To me, success is when my design brings joy in the everyday lives of people”

With her own design studio in Copenhagen, Maria Berntsen has since 1992 focused on architecture and design. Maria Berntsen is a well-established name in the design industry and has over the years collaborated with a wide range of Danish and international companies, where her extensive experience has resulted in many successful designs.

“At the start of a new project, I look for an idea with nerve, functionality and identity. By modelling and visualizing, I test the idea, how it might be used, and its presence.

Good design communicates and establishes a dialogue with the receiver. Design is not just about functionality – it is as much about the emotional connection and impact. To me, success is when my design brings joy in the everyday lives of people”

Glossy Table, Grey 2020505010

Glossy

Glossy is the epitome of tasteful and sophisticated design. Danish designer Maria Berntsen has created a table lamp that oozes of Nordic minimalism, where the combination of brushed steel and opal white glass contributes to an incredibly elegant design. Glossy is named after the shiny surface of the opal white glass, which lets a soft and comfortable light shine through.

Learn more about Glossy on page 130

”Glossy is my favourite lamp. I feel that it successfully balances form and a mix of materials. The entire construction and expression of the lamp is simple and timeless.

It makes me proud and incredibly happy that the design has been acknowledged with a Red Dot Award”

Maria Berntsen

Glossy Table, Grey 2020505010

reddot winner 2021
lighting design

Align

Align is a series of contemporary and elegant table lamps by Danish designer Maria Berntsen that encourage interaction and curiosity. The inner shade of the lamp is static, while the outer shade can easily be moved for a changeable light that fits any need.

Learn more about Align on page 128

Watch the full ambience video
to explore the Align series

Align Table, Green 2120095023, Beige 2120095009, Dusty Rose 2120095057, Brown 2120095018, Chrome 2120095033

Align Table, Green 2120095023

Align Table, Beige 2120095009

Stay Short Wall, Grey 2220381010

Stay

Stay is designed by Maria Berntsen and is a modern, yet timeless lighting design at the same time. The oblique cut of the shade creates an open and pointing shape that allows for lots of light to shine through. The Stay wall light emits a soft, comfortable light both upwards and downwards – creating the perfect light for your bedside or kitchen table.

Learn more about Stay on page 102

Studio Mavro//Lèfevre by Sofie Lèfevre

Sofie Lefèvre
Holds a degree in Innovation
Design from Royal College of Art

Based in Copenhagen, Denmark

“I generally like challenges. Challenges create a sense of suspension, even though I know that it’s almost always possible to find a solution – it’s really just a matter of time”

The road to becoming a designer has not been straight ahead for Sofie Lefèvre. She started studying medicine, but after a year changed her course and continued her education within the design field. Several years in London and a degree in Innovation Design from Royal College of Art gave her hands-on experience and the drive to pursue a career within design.

Working with lighting design comes naturally to Sofie. She understands and emphasizes the impact light has on our lives and is fascinated by the way light can change the interior: *“I find it very interesting working with atmospheres created by light. There are so many aspects where my inner child can be released, playing with angles, materials and openings to create the wanted reflection or diffusion of light.”*

Mademoiselles Table, White 2220405001

Mademoiselles

Mademoiselles by Danish design Studio Mavro//Lèfevre by Sofie Lèfevre has a fun and light-hearted design expression where the round, oversized shade is balanced by the solid, marble base. Light is reflected upwards onto the bottom of the shade, creating a soft, indirect ambience.

Learn more about Mademoiselles on page 131

Mademoiselles Table, Black 2220405003

Navone

Navone is designed by Danish design Studio Mavro//Lèfevre by Sofie Lèfevre. The overall shape of the shade is soft and round, yet the very subtle curved bottom adds a new interesting dimension that transforms the lamp into more than just a sphere. The brass details add a contemporary touch, underlining the suspended lightness of the lamp.

Learn more about Navone on page 120

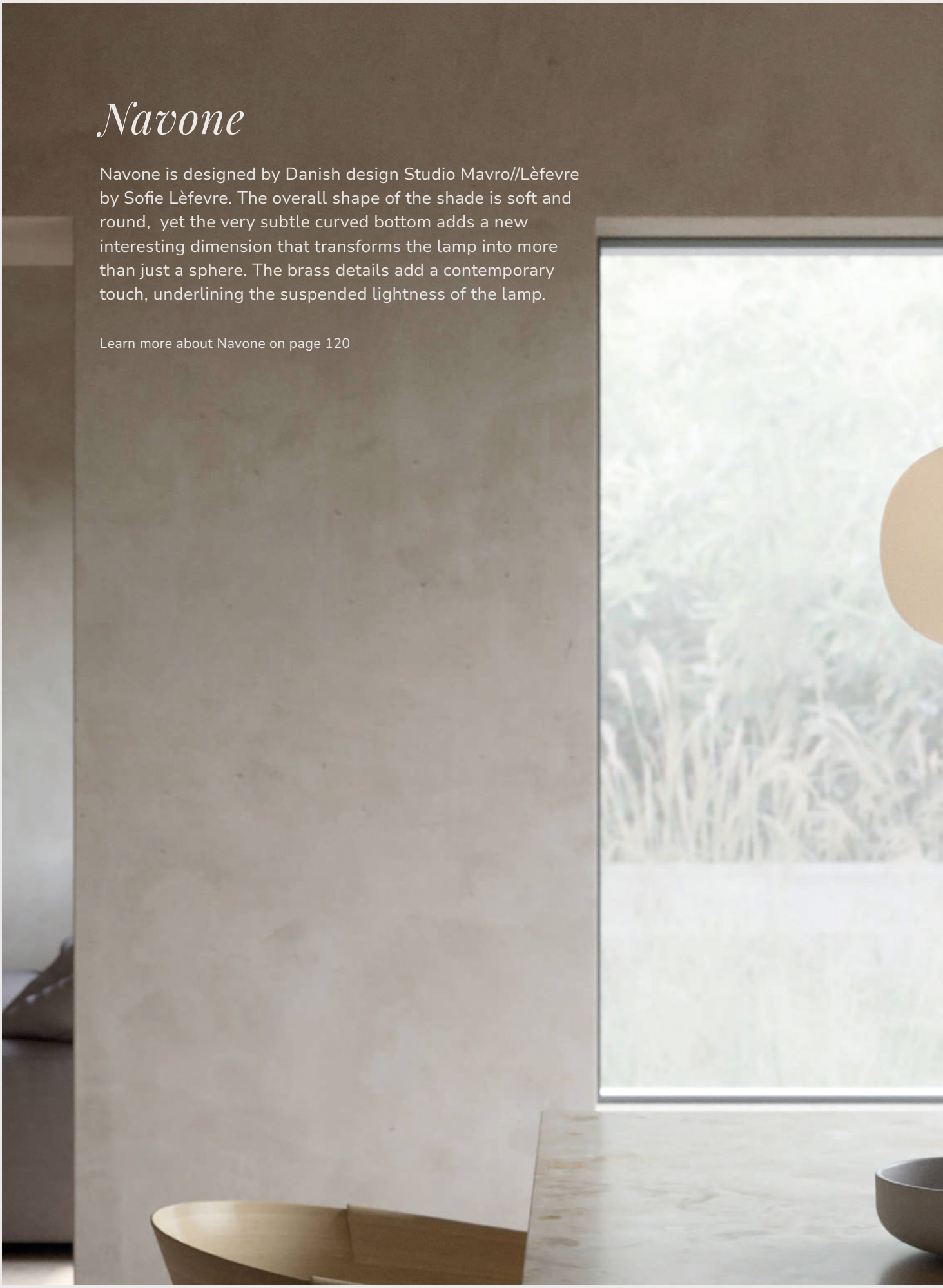

Watch the full ambience video
to explore the Navone series

“Navone holds a special place in my heart. It is inspired by the fascinating glass art from the Murano Island in Italy.

The design of Navone is quite timeless, and I love how the suspension becomes an extension of the shape of the glass – two shapes in one harmonic interplay”

Sofie Lefèvre

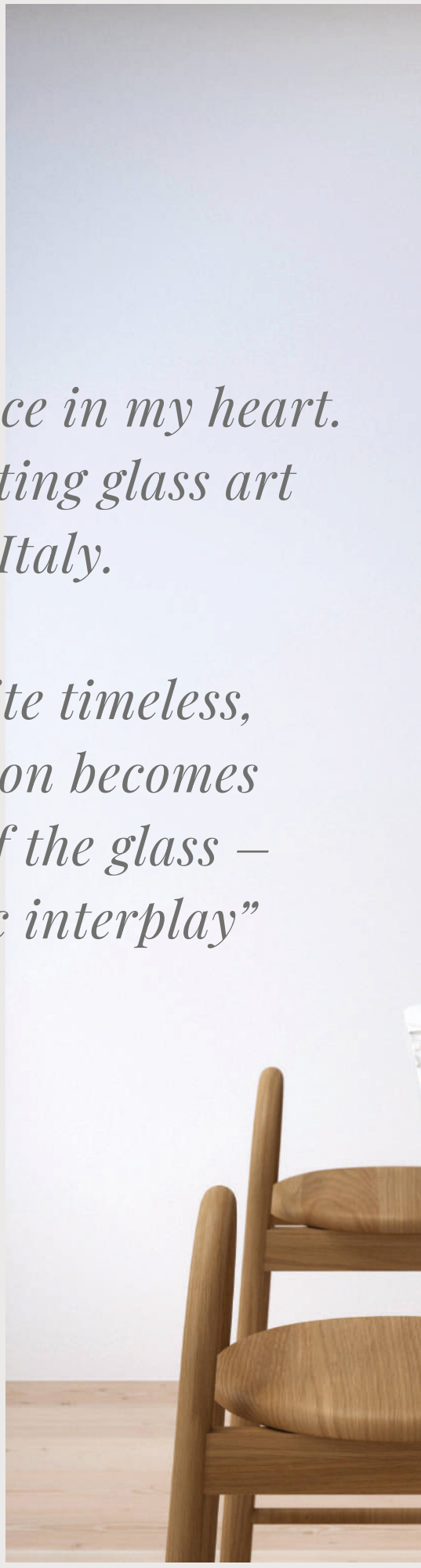

Beau 100 Pendant, Black 2220483003

Beau 50 Pendant, Black 2220473003

Beau

Designed by Danish design Studio Mavro//Lèfevre by Sofie Lèfevre, the Beau pendant is based on the idea of extruding the silhouette of a lamp horizontally in space. Beau has a slim, minimalist design that looks beautiful above a dining table or in the kitchen. Comes with a replaceable bulb.

Learn more about Beau on page 116

Collection
2022/2023

White/Telegrey 2220362001
Metal/Plastic

Black 2220362003
Metal/Plastic

Grey 2220362010
Metal/Plastic

Angle Clamp Clamp lamp *By Maria Berntsen*

Masterbox	Qty. 3
Size	H: 12,4 cm, W: 10 cm, L: 10 cm, Shade Ø: 10 cm, Tilt angel: 170°
IP Class	IP20, Class 2 (Double insulated)
Cable	Textile cable: White/Black/Grey 180 cm, non replaceable
	Switch: On the cable
Light source	GU10 - not included, Max. 15W
	Can not be dimmed

Features
Cool and playful design
Satin soft, matt surface
Magnet for easy adjustment of the shade
Easy to place

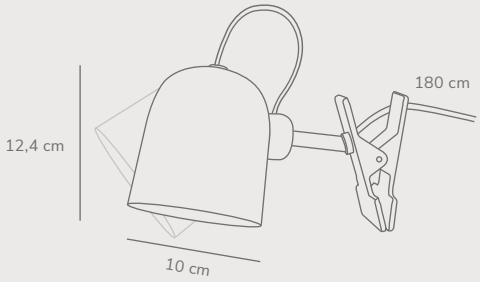

White/Telegrey 2120601001
Metal/Plastic

Black 2120601003
Metal/Plastic

Grey 2120601010
Metal/Plastic

Angle GU10 Wall light *By Maria Berntsen*

Masterbox	Qty. 3
Size	H: 19,1 cm, W: 11 cm, L: 17 cm, Shade Ø: 10,5 cm, Base Ø: 11 cm,
	Tilt angel: 170°
IP Class	IP20, Class 2 (Double insulated)
Cable	Textile cable: White/Black/Grey 180 cm, replaceable
	Switch: On the fixture
Light source	GU10 - not included, Max. 25W
	Can not be dimmed

Features
Satin soft, matt surface
Magnet for easy adjustment of the shade
USB port for charging your phone or other device

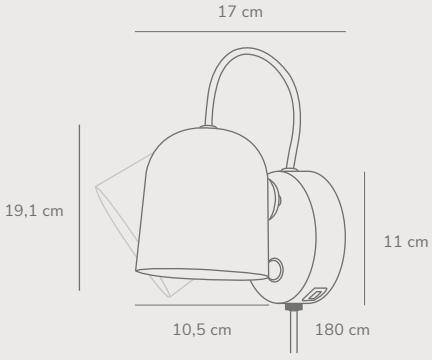

White/Telegrey 2020673001
Metal/Plastic

Black 2020673003
Metal/Plastic

Grey 2020673011
Metal/Plastic

Angle E27 Pendant *By Maria Berntsen*

Masterbox	Qty. 3
Size	H: 31,5 cm, Shade Ø: 20,6 cm,
IP Class	IP20, Class 2 (Double insulated)
Cable	Textile cable: White/Black/Grey 300 cm, non replaceable
Light source	E27 - not included, Max. 60W Can be dimmed by choosing a dimmable bulb

Features
Minimalistic shape and design
Possible to position pendant in different angles
Change position with magnet on the cord

Brass 2120753035
Metal/Plastic

Blanche 32 Pendant *By Bjørn+Balle*

Masterbox	Qty. 2
Size	H: 14 cm, Shade Ø: 32 cm,
IP Class	IP20, Class 2 (Double insulated)
Cable	Textile cable: White 300 cm, non replaceable
Light source	LED Module - 15W LED, 1700 Lumen, 3000 Kelvin, 30000 Hours, RA 80, Has built-in dimmable light source for wall dimmer

Features
Elegant brushed brass details
Built-in LED
Dimmable
5 year LED guarantee

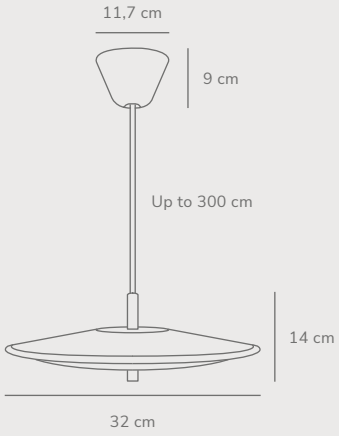

Brass 2120773035
Metal/Plastic

Blanche 42 Pendant *By Bjørn+Balle*

Masterbox	Qty. 2
Size	H: 14,5 cm, Shade Ø: 42 cm,
IP Class	IP20, Class 2 (Double insulated)
Cable	Textile cable: White 300 cm, non replaceable
Light source	LED Module - 23W LED, 2900 Lumen, 3000 Kelvin, 30000 Hours, RA 80, Has built-in dimmable light source for wall dimmer

Features
Elegant brushed brass details
Built-in LED
Dimmable
5 year LED guarantee

New

Brass 2120794035
Metal/Plastic

Blanche Floor lamp *By Bjørn+Balle*

Masterbox	Qty. 1
Size	H: 141 cm, Shade Ø: 32 cm, Tube Ø: 1,25 cm, Base Ø: 30 cm,
IP Class	IP20, Class 2 (Double insulated)
Cable	Textile cable: White 250 cm, non replaceable Switch: On the fixture
Light source	LED Module - 15W LED, 1600 Lumen, 3000 Kelvin, 30000 Hours, RA 80, Has built-in dimmable light source with button or touch

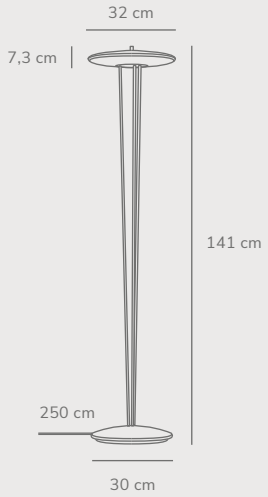

Features
Built-in LED
On/off touch switch and dimmer on fixture
Memory function remembers your last dimmer setting
5 year LED guarantee

Black 2120551003
Metal/Plastic

Darci Wall light *By Bjørn+Balle*

Masterbox	Qty. 3
Size	H: 36,5 cm, W: 23 cm, L: 55 cm, Shade Ø: 23 cm, Shade H: 16,5 cm, Tube Ø: 1,25 cm, Base Ø: 11 cm, Tilt angel: 135°
IP Class	IP20, Class 2 (Double insulated)
Cable	Textile cable: Black 180 cm, replaceable Switch: On the fixture
Light source	E14 - not included, Max. 25W Can not be dimmed

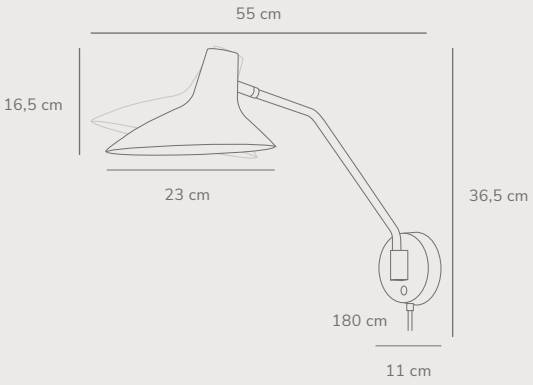

Features
Solid, high quality materials
Swivel/tilt joint for easy adjustment of lamp head
On/off touch switch on wall base

Black 2120565003
Metal/Plastic

Darci Table lamp *By Bjørn+Balle*

Masterbox	Qty. 2
Size	H: 55 cm, W: 23 cm, L: 54 cm, Shade Ø: 23 cm, Shade H: 16,5 cm, Tube Ø: 1,25 cm, Base Ø: 20 cm, Tilt angel: 135°
IP Class	IP20, Class 2 (Double insulated)
Cable	Textile cable: Black 250 cm, non replaceable Switch: On the fixture
Light source	E14 - not included, Max. 25W Can not be dimmed

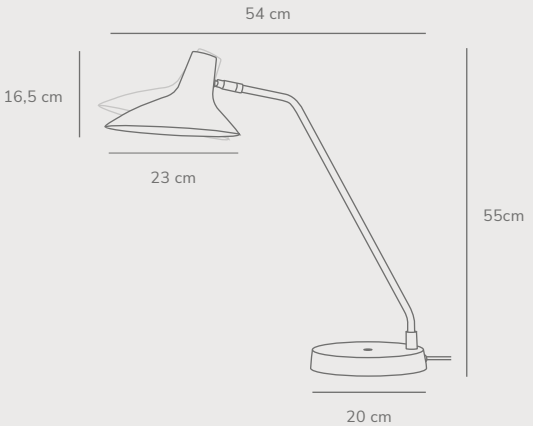

Features
Solid, high quality materials
Swivel/tilt joint for easy adjustment of lamp head
On/off touch switch on base

Black 2120584003
Metal/Plastic

Darci Floor lamp *By Bjørn+Balle*

Masterbox	Qty. 2
Size	H: 143 cm, W: 23 cm, L: 54,8 cm, Shade Ø: 23 cm, Shade H: 16,5 cm
	Tube Ø: 1,56 cm, Base Ø: 23 cm, Tilt angel: 135°
IP Class	IP20, Class 2 (Double insulated)
Cable	Textile cable: Black 250 cm, non replaceable
	Switch: On the cable
Light source	E14 - not included, Max. 25W
	Can not be dimmed

Features
Solid, high quality materials
Swivel/tilt joint for easy adjustment of lamp head
On/off floor switch on cable

White 2020666001
Metal/Plastic

Black 2020666003
Metal/Plastic

Mib 6 Ceiling light *By Bønnelycke MDD*

Masterbox	Qty. 3
Size	H: 20 cm, W: 10 cm, Shade Ø: 6 cm, Base Ø: 10 cm, Tilt angel: 90°
IP Class	IP20, Class 2 (Double insulated)
Light source	GU10 - not included, Max. 8W Can be dimmed by choosing a dimmable bulb

Features
Contemporary, yet timeless design
Slim and elegant
Tiltable head, possible to adjust light direction

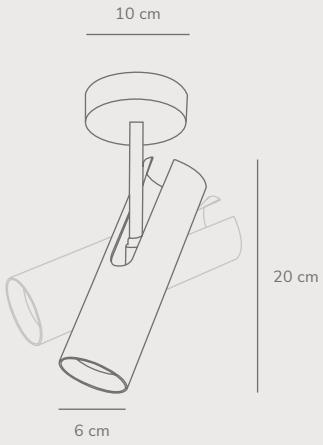

White 61681001
Metal/Plastic

Black 61681003
Metal/Plastic

Grey 61681011
Metal/Plastic

Mib 6 Wall light *By Bønnelycke MDD*

Masterbox	Qty. 3
Size	H: 20 cm, W: 10 cm, D: 17,1 cm, Shade Ø: 6 cm, Base Ø: 10 cm, Tilt angel: 90°
IP Class	IP20, Class 2 (Double insulated)
Cable	Plastic cable: White/Black/Grey 200 cm, replaceable Switch: On wall base
Light source	GU10 - not included, Max. 8W Can not be dimmed

Features
Contemporary, yet timeless design
Slim and elegant
Tiltable head, possible to adjust light direction
On/off touch switch on wall base

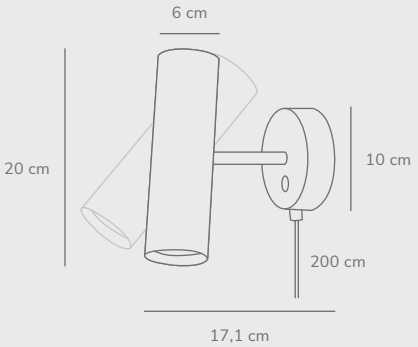

White 71655001
Metal/Plastic

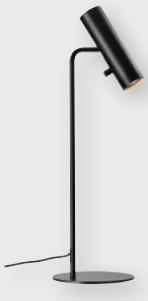

Black 71655003
Metal/Plastic

Grey 71655011
Metal/Plastic

Mib 6 Table lamp *By Bønnelycke MDD*

Masterbox	Qty. 3
Size	H: 66 cm, Shade Ø: 6 cm, Tube Ø: 1,27 cm, Base Ø: 20 cm, Tilt angel: 90°
IP Class	IP20, Class 2 (Double insulated)
Cable	Plastic cable: White/Black/Grey 250 cm, non replaceable Switch: On the fixture
Light source	GU10 - not included, Max. 8W Can not be dimmed

Features
Contemporary, yet timeless design
Slim and elegant
Tiltable head, possible to adjust light direction
On/off switch on lamp head

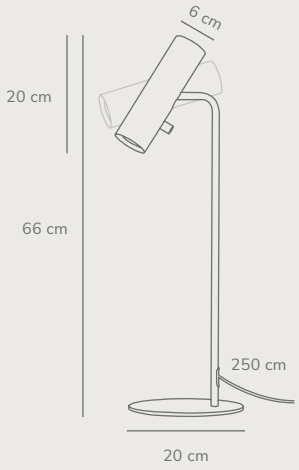

White 71704001
Metal/Plastic

Black 71704003
Metal/Plastic

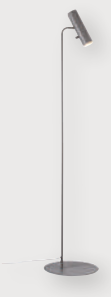

Grey 71704011
Metal/Plastic

Mib 6 Floor lamp *By Bønnelycke MDD*

Masterbox	Qty. 2
Size	H: 141 cm, Shade Ø: 6 cm, Shade H: 20 cm, Tube Ø: 1,27 cm, Base Ø: 30 cm, Tilt angel: 90°
IP Class	IP20, Class 2 (Double insulated)
Cable	Plastic cable: White/Black/Grey 250 cm, non replaceable Switch: On the fixture
Light source	GU10 - not included, Max. 8W Can not be dimmed

Features
Contemporary, yet timeless design
Slim and elegant
Tiltable head, possible to adjust light direction
On/off switch on lamp head

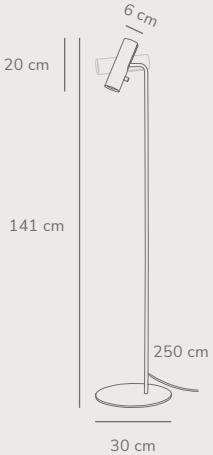

White 71679901
Metal/Plastic

Black 71679903
Metal/Plastic

Grey 71679911
Metal/Plastic

Mib 6 Pendant *By Bønnelycke MDD*

Masterbox	Qty. 3
Size	H: 27 cm, Shade Ø: 6 cm, Shade H: 20 cm, Tube Ø: 1 cm, Tilt angle: 180°
IP Class	IP20, Class 2 (Double insulated)
Cable	Textile cable: White/Black/Grey 300 cm, non replaceable
Light source	GU10 - not included, Max. 8W Can be dimmed by choosing a dimmable bulb

Features

Contemporary, yet timeless design
Slim and elegant
Tiltable head, possible to adjust light direction

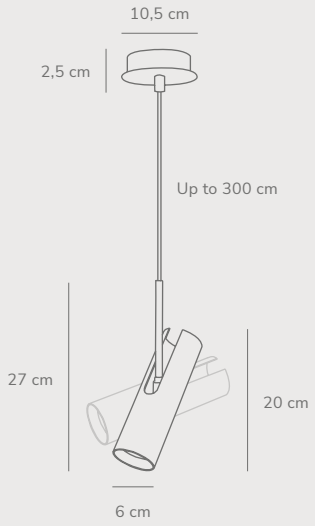

White/Telegrey 2020601001
Metal/Plastic

Black 2020601003
Metal/Plastic

Nexus 2 Wall light *By Bønnelycke MDD*

Masterbox	Qty. 3
Size	H: 22 cm, D: 19 cm, Shade Ø: 10 cm, Shade H: 15 cm, Base Ø: 12 cm, Tilt angel: 90°
IP Class	IP20, Class 2 (Double insulated)
Cable	Textile cable: White/Black 250 cm, replaceable Switch: On the fixture
Light source	GU10 - not included, Max. 6W Can not be dimmed

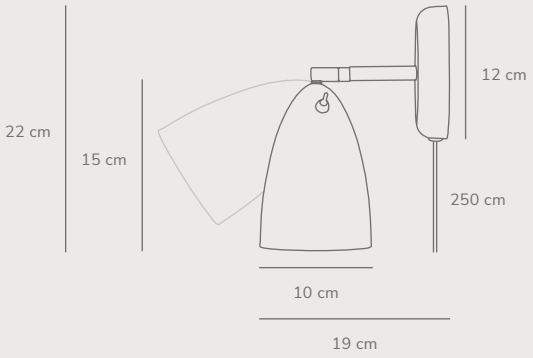

Features
Minimalistic and timeless design
Beautiful brass swivel tilt joint
Satin matt finish
Elegant and strong brushed brass on/off switch

White/Telegrey 2020625001
Metal/Plastic

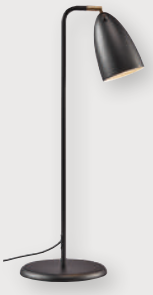

Black 2020625003
Metal/Plastic

Nexus 2 Table lamp *By Bønnelycke MDD*

Masterbox	Qty. 2
Size	H: 66 cm, Shade Ø: 10 cm, Shade H: 15 cm, Base Ø: 20 cm, Tilt angel: 90°
IP Class	IP20, Class 2 (Double insulated)
Cable	Textile cable: White/Black 250 cm, non replaceable Switch: On the fixture
Light source	GU10 - not included, Max. 6W Can not be dimmed

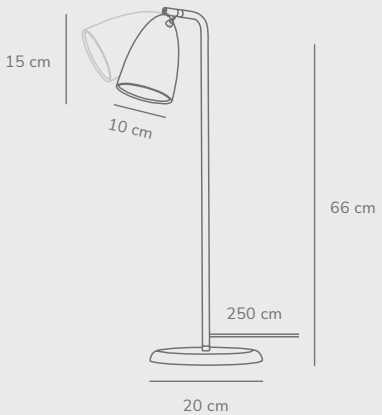

Features
Minimalistic and timeless design
Beautiful brass swivel tilt joint
Satin matt finish
Elegant and strong brushed brass on/off switch

White/Telegrey 2020563001
Metal/Plastic

Black 2020563003
Metal/Plastic

Nexus 2.0 Small Pendant *By Bønnelycke MDD*

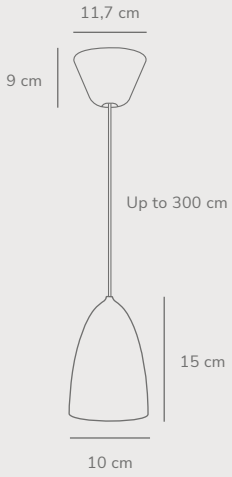

Masterbox	Qty. 3
Size	H: 15 cm, W: 10 cm, Shade Ø: 10 cm,
IP Class	IP20, Class 2 (Double insulated)
Cable	Textile cable: White/Black 300 cm, non replaceable
Light source	GU10 - not included, Max. 6W Can be dimmed by choosing a dimmable bulb

Features
Minimalistic and timeless design
Diffuser covers light source and softens light
Satin matt finish

White/Telegrey 2020583001
Metal/Plastic

Black 2020583003
Metal/Plastic

Nexus 2 Pendant *By Bønnelycke MDD*

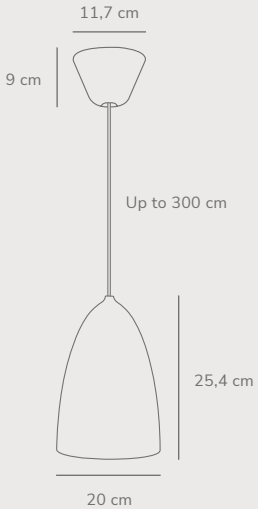

Masterbox	Qty. 2
Size	H: 25,4 cm, W: 20 cm, Shade Ø: 20 cm,
IP Class	IP20, Class 2 (Double insulated)
Cable	Textile cable: White/Black 300 cm, non replaceable
Light source	E27 - not included, Max. 40W Can be dimmed by choosing a dimmable bulb

Features
Minimalistic and timeless design
Diffuser covers light source and softens light
Satin matt finish

White/Telegrey 2020644001
Metal/Plastic

Black 2020644003
Metal/Plastic

Nexus 2 Floor lamp *By Bønnelycke MDD*

Masterbox	Qty. 2
Size	H: 140,8 cm, Shade Ø: 10 cm, Shade H: 15 cm, Base Ø: 26 cm, Tilt angel: 90°
IP Class	IP20, Class 2 (Double insulated)
Cable	Textile cable: White/Black 250 cm, non replaceable Switch: On the fixture
Light source	GU10 - not included, Max. 6W Can not be dimmed

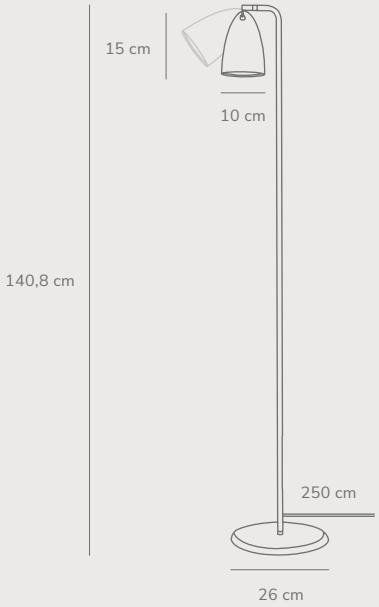

Features
Minimalistic and timeless design
Beautiful brass swivel tilt joint
Satin matt finish
Elegant and strong brushed brass on/off switch

Black 2220171003
Metal/Plastic

Nomi Wall light *By Bønnelycke MDD*

Masterbox	Qty. 3
Size	H: 35,1 cm, W: 60,5 cm, L: 60,5 cm, Shade Ø: 12,5 cm,
IP Class	IP20, Class 2 (Double insulated)
Cable	Textile cable: Black 250 cm, Replaceable
	Switch: On the fixture
Light source	E14 - not included, Max. 8W
	Can not be dimmed

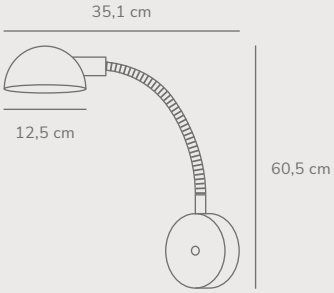

Features
Minimalistic design
Adjustable lamp head
Perfect reading light
Gooseneck for maximum flexibility

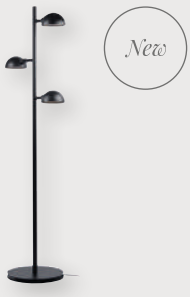

Black 2220194003
Metal/Plastic

Nomi Floor lamp *By Bønnelycke MDD*

Masterbox	Qty. 1
Size	H: 142,5 cm, W: 30 cm, L: 30 cm, Shade Ø: 12,5 cm,
	Base Ø: 30 cm, Tilt angel: 90.9°
IP Class	IP20, Class 2 (Double insulated)
Cable	Textile cable: Black 250 cm, non replaceable
	Switch: On the fixture
Light source	E14 - not included, Max. 3x8W
	Can not be dimmed

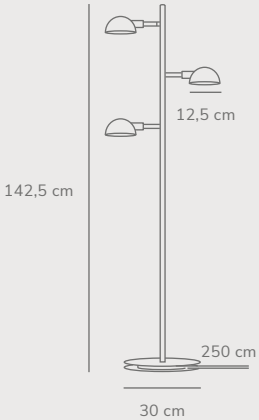

Features
Minimalistic design
Adjustable lamp heads
Perfect reading light
Touch on/off on top of tube

Black 2220163003
Metal/Plastic

Nomi Pendant *By Bønnelycke MDD*

Masterbox	Qty. 1
Size	H: 38,2 cm, Ø: 74 cm, Shade Ø: 12,5 cm,
IP Class	IP20, Class 2 (Double insulated)
Cable	Textile cable: Black 300 cm,
Light source	E14 - not included, Max. 25W Can be dimmed by choosing a dimmable bulb

Features
Minimalistic design
Perfect above a round table

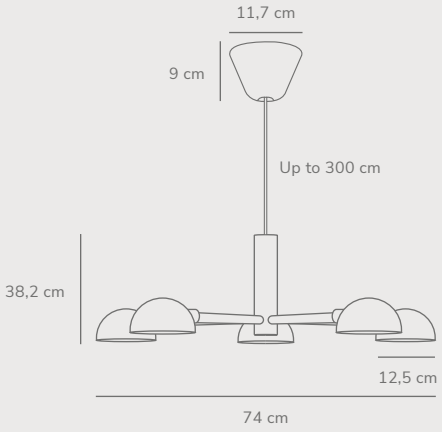

White 78271001
Metal/Wood

Black 78271003
Metal/Wood

Grey 78271011
Metal/Wood

Pure Wall light *By Bønnelycke MDD*

Masterbox	Qty. 3
Size	H: 26 cm, D: 17 cm, Shade Ø: 7,5 cm, Base Ø: 10 cm
IP Class	IP20, Class 2 (Double insulated)
Cable	Textile cable: White/Black/Grey 180 cm, replaceable
	Switch: On the fixture
Light source	GU10 - not included, Max. 8W
	Can not be dimmed

Features
Minimalistic design
Nordic style
On/off switch on lamp head

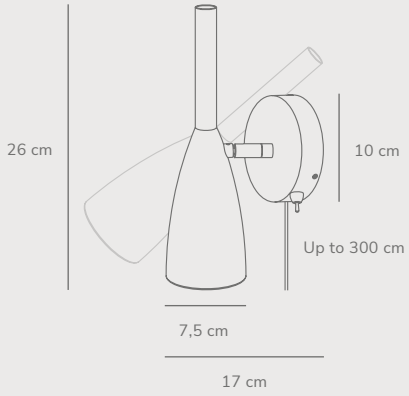

White 78283001
Metal/Wood

Black 78283003
Metal/Wood

Grey 78283011
Metal/Wood

Pure 10 Pendant *By Bønnelycke MDD*

Masterbox	Qty. 3
Size	H: 35 cm, Shade Ø: 10 cm,
IP Class	IP20, Class 2 (Double insulated)
Cable	Textile cable: White/Black/Grey 300 cm, non replaceable
Light source	E27 - not included, Max. 40W
	Can be dimmed by choosing a dimmable bulb

Features
Minimalistic design
Nordic style

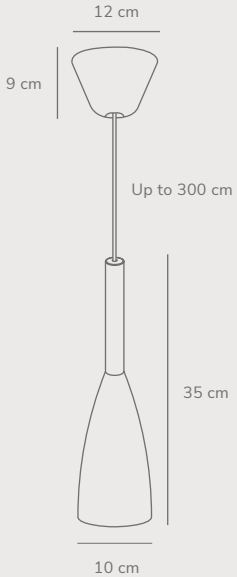

White 43293001
Metal/Wood

Black 43293003
Metal/Wood

Grey 43293010
Metal/Wood

Pure 20 Pendant *By Bønnelycke MDD*

Masterbox	Qty. 3
Size	H: 35 cm, Shade Ø: 20 cm,
IP Class	IP20, Class 2 (Double insulated)
Cable	Textile cable: White/Black/Grey 300 cm, non replaceable
Light source	E27 - not included, Max. 40W
	Can be dimmed by choosing a dimmable bulb

Features
Minimalistic design
Nordic style

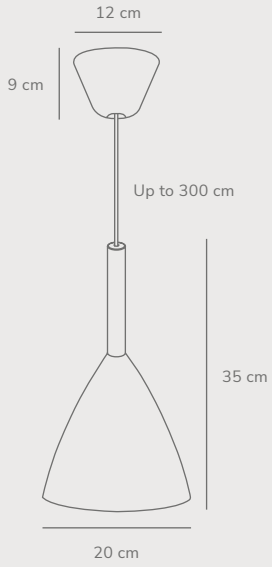

White/Brass 48013001
Glass/Metal

Raito 22 Pendant *By Bønnelycke MDD*

Masterbox	Qty. 2
Size	H: 29,1 cm, Shade Ø: 22,5 cm,
IP Class	IP20, Class 2 (Double insulated)
Cable	Textile cable: White 300 cm, non replaceable
Light source	E27 - not included, Max. 25W
	Can be dimmed by choosing a dimmable bulb

Features
Modern yet timeless design
Nordic style
Soft and diffused light
Material mix of exclusive brass and opalized glass

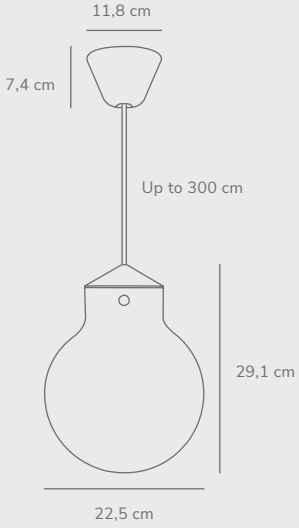

White/Brass 48043001
Glass/Metal

Raito 22 Pendant *By Bønnelycke MDD*

Masterbox	Qty. 2
Size	H: 37 cm, Shade Ø: 22,5 cm,
IP Class	IP20, Class 2 (Double insulated)
Cable	Textile cable: White 300 cm, non replaceable
Light source	E27 - not included, Max. 25W
	Can be dimmed by choosing a dimmable bulb

Features
Modern yet timeless design
Nordic style
Soft and diffused light
Material mix of exclusive brass and opalized glass

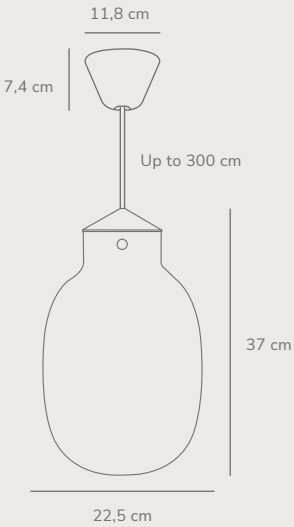

48023001
Glass/Metal

Raito 30 Pendant *By Bønnelycke MDD*

Masterbox	Qty. 2
Size	H: 37 cm, Shade Ø: 30 cm,
IP Class	IP20, Class 2 (Double insulated)
Cable	Textile cable: White 300 cm, non replaceable
Light source	E27 - not included, Max. 25W
	Can be dimmed by choosing a dimmable bulb

Features
Modern yet timeless design
Nordic style
Soft and diffused light
Material mix of exclusive brass and opalized glass

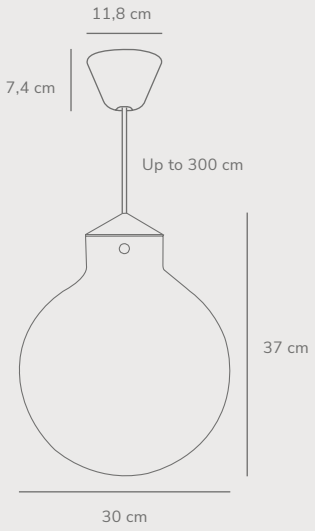

Opal white 48033001
Glass/Metal

Raito 30 Pendant *By Bønnelycke MDD*

Masterbox	Qty. 2
Size	H: 30,1 cm, Shade Ø: 30 cm,
IP Class	IP20, Class 2 (Double insulated)
Cable	Textile cable: White 300 cm, non replaceable
Light source	E27 - not included, Max. 25W
	Can be dimmed by choosing a dimmable bulb

Features
Modern yet timeless design
Nordic style
Soft and diffused light
Material mix of exclusive brass and opalized glass

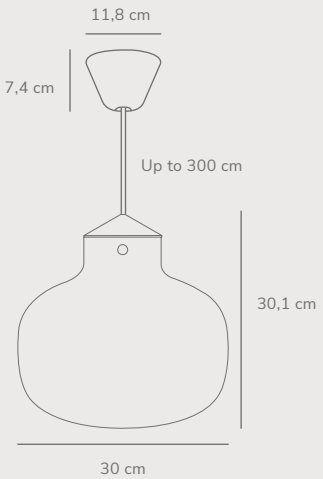

White/Brass 48053001
Glass/Metal

Raito 3-Arm Pendant *By Bønnelycke MDD*

Masterbox	Qty. 1
Size	H: 55 cm, W: 57 cm, Shade Ø: 20 cm, Shade H: 20 cm
IP Class	IP20, Class 2 (Double insulated)
Cable	Textile cable: White 300 cm, non replaceable
Light source	E27 - not included, Max. 25W Can be dimmed by choosing a dimmable bulb

Features
Modern yet timeless design
Nordic style
Soft and diffused light
Material mix of exclusive brass and opalized glass

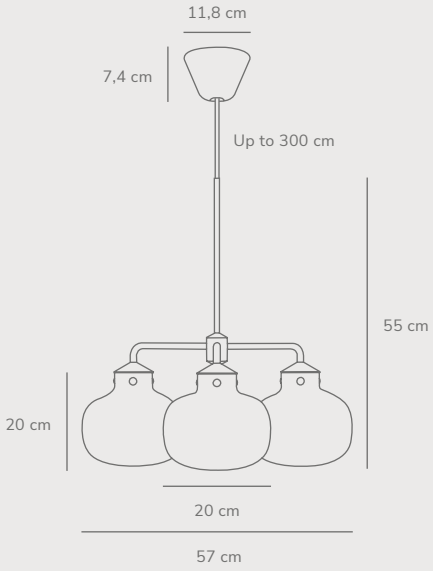

White/Brass 48063001
Glass/Metal

Raito 5-Arm Pendant *By Bønnelycke MDD*

Masterbox	Qty. 1
Size	H: 55 cm, W: 67 cm, Shade Ø: 20 cm, Shade H: 20 cm
IP Class	IP20, Class 2 (Double insulated)
Cable	Textile cable: White 300 cm, non replaceable
Light source	E27 - not included, Max. 25W Can be dimmed by choosing a dimmable bulb

Features
Modern yet timeless design
Nordic style
Soft and diffused light
Material mix of exclusive brass and opalized glass

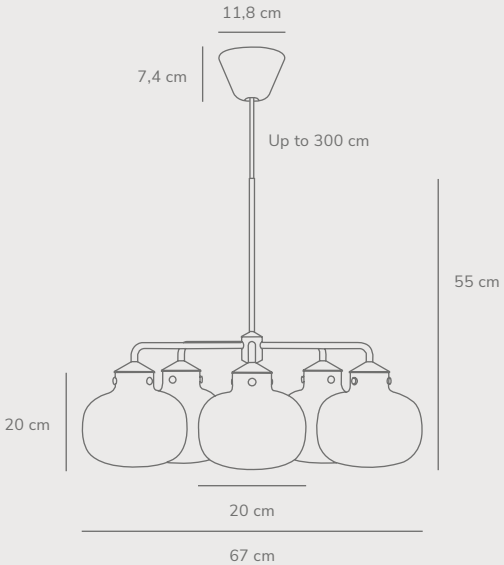

White/Brass 48075001
Glass/Metal

Raito Table lamp *By Bønnelycke MDD*

Masterbox	Qty. 2
Size	H: 21,2 cm, Shade Ø: 20 cm, Base Ø: 7,4 cm,
IP Class	IP20, Class 2 (Double insulated)
Cable	Textile cable: White 180 cm, non replaceable
	Switch: On the fixture
Light source	E27 - not included, Max. 25W
	Can not be dimmed

Features
Modern yet timeless design
Nordic style
Soft and diffused light
Material mix of exclusive brass and opalized glass
Brass on/off switch on back side of base

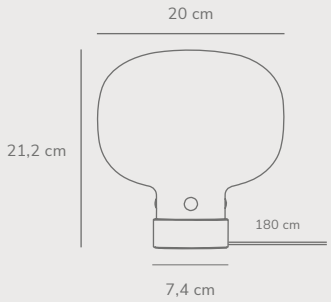

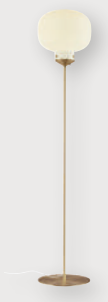

White/Brass 48084001
Glass/Metal

Raito Floor lamp *By Bønnelycke MDD*

Masterbox	Qty. 1
Size	H: 150 cm, Shade Ø: 30 cm, Base Ø: 30 cm, Shade H: 30 cm
IP Class	IP20, Class 2 (Double insulated)
Cable	Textile cable: White 300 cm, non replaceable
	Switch: On the fixture
Light source	E27 - not included, Max. 15W
	Can not be dimmed

Features
Modern yet timeless design
Nordic style
Soft and diffused light
Material mix of exclusive brass and opalized glass
Brass on/off switch on back side of lamp head

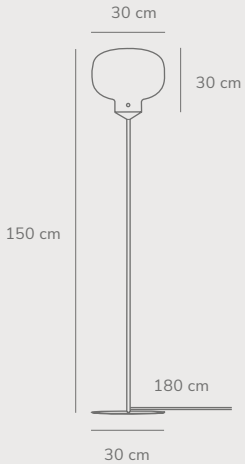

Opal white 48091001
Glass/Metal

Raito Wall light *By Bønnelycke MDD*

Masterbox	Qty. 2
Size	H: 25,7 cm, D: 25 cm, Shade Ø: 20 cm, Base Ø: 10 cm, Shade H: 20 cm
IP Class	IP20, Class 2 (Double insulated)
Cable	Textile cable: White 250 cm, replaceable
	Switch: On the fixture
Light source	E27 - not included, Max. 15W
	Can not be dimmed

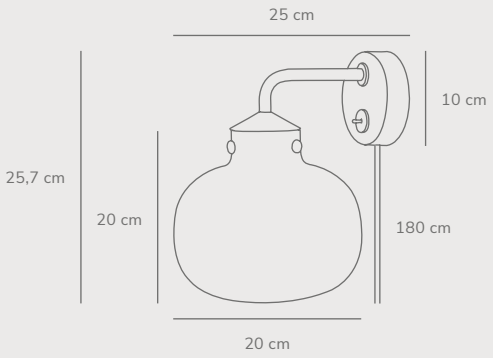

Features
Modern yet timeless design
Nordic style
Soft and diffused light
Material mix of exclusive brass and opalized glass

Brass 2120013035
Glass/Metal

Shapes 22 Pendant *By Maria Berntsen*

Masterbox	Qty. 3
Size	H: 51,5 cm, Shade Ø: 22 cm, Tube Ø: 1,53 cm, Shade H: 18 cm
IP Class	IP20, Class 2 (Double insulated)
Cable	Textile cable: Black 300 cm, non replaceable
Light source	E27 - not included, Max. 15W Can be dimmed by choosing a dimmable bulb

Features
Exclusive materials - shiny brass and opal glass
Soft and diffused light through the opalized glass shade
Mouth blown asymmetrical glass

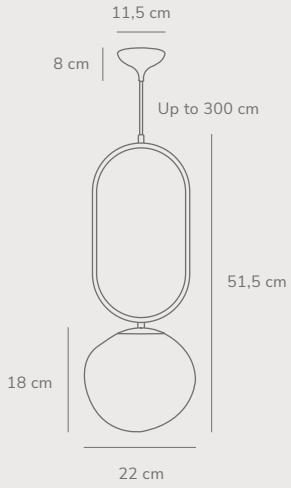

Brass 2120023035
Glass/Metal

Shapes 27 Pendant *By Maria Berntsen*

Masterbox	Qty. 2
Size	H: 60,5 cm, W: 22 cm, L: 27 cm, Shade Ø: 27 cm, Shade H: 22 cm Tube Ø: 1,53 cm,
IP Class	IP20, Class 2 (Double insulated)
Cable	Textile cable: Black 300 cm, non replaceable
Light source	E27 - not included, Max. 15W Can be dimmed by choosing a dimmable bulb

Features
Exclusive materials - shiny brass and opal glass
Soft and diffused light through the opalized glass shade
Mouth blown asymmetrical glass

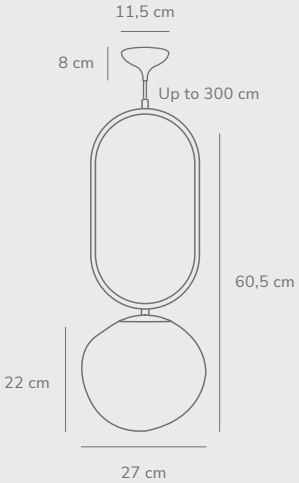

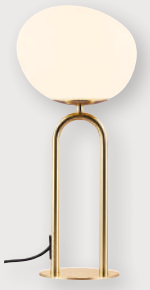

Brass 2120055035
Glass/Metal

Shapes Table lamp *By Maria Berntsen*

Masterbox	Qty. 3
Size	H: 47 cm, W: 18 cm, Shade Ø: 22 cm, Shade H: 18 cm
	Tube Ø: 1,53 cm, Base Ø: 14 cm,
IP Class	IP20, Class 2 (Double insulated)
Cable	Textile cable: Black 250 cm, non replaceable
	Switch: On the cable
Light source	E27 - not included, Max. 15W
	Can not be dimmed

Features
Exclusive materials - shiny brass and opal glass
Soft and diffused light through the opalized glass shade
Mouth blown asymmetrical glass

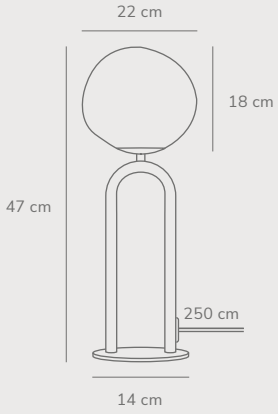

Brass 2120074035
Glass/Metal

Shapes Floor lamp *By Maria Berntsen*

Masterbox	Qty. 2
Size	H: 135 cm, W: 28 cm, L: 28 cm, Shade Ø: 27 cm, Shade H: 22 cm
	Tube Ø: 1,9 cm, Base Ø: 28 cm,
IP Class	IP20, Class 2 (Double insulated)
Cable	Textile cable: Black 250 cm, non replaceable
	Switch: On the cable
Light source	E27 - not included, Max. 15W
	Can not be dimmed

Features
Exclusive materials - shiny brass and opal glass
Soft and diffused light through the opalized glass shade
Mouth blown asymmetrical glass

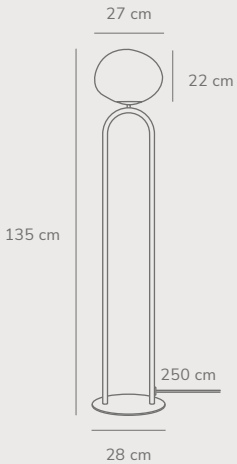

Black 2220381003
Metal/Plastic

Grey 2220381010
Metal/Plastic

Stay Short Wall light *By Maria Berntsen*

Masterbox	Qty. 3
Size	H: 11,7 cm, Shade Ø: 15 cm, Base Ø: 10 cm, Tilt angel: 90°
IP Class	IP20, Class 2 (Double insulated)
Cable	Textile cable: Black/Grey 180 cm, replaceable Switch: On the fixture
Light source	E27 - not included, Max. 60W Can not be dimmed

Features
Adjustable lamp head
Lights both up and down
Perfect as a bedside light

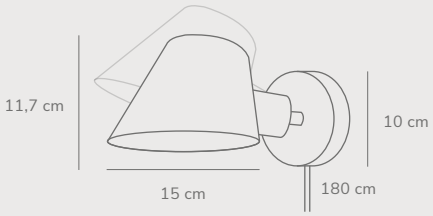

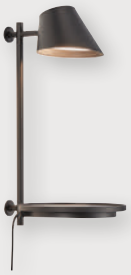

Black 48171003
Aluminium/Plastic

Grey 48171010
Aluminium/Plastic

Stay Wall light *By Maria Berntsen*

Masterbox	Qty. 2
Size	H: 44,5 cm, W: 22 cm, D: 27 cm, Shade Ø: 14,5 cm, Tube Ø: 1,2 cm, Shade H: 9 cm Base Ø: 22 cm, Tilt angel: 90°
IP Class	IP20, Class 2 (Double insulated)
Cable	Textile cable: Black/Grey 180 cm, replaceable Switch: On the fixture
Light source	LED Module - 14,5W LED, 700 Lumen, 2700 Kelvin, 20000 Hours, RA 80, Beamangle 100°, Has built-in dimmable light source with button or touch

Features
Adjustable lamp head
Touch on/off and dimming
Table can hold 500g

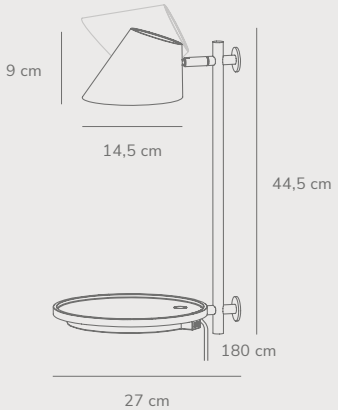

Black 2020455003
Aluminium/Plastic

Grey 2020455010
Aluminium/Plastic

Stay Wall light *By Maria Berntsen*

Masterbox	Qty. 2
Size	H: 54,5 cm, D: 72,3 cm, Shade Ø: 15 cm, Tube Ø: 1,57 cm, Base Ø: 10 cm, Shade H: 11, 7 cm
IP Class	IP20, Class 2 (Double insulated)
Cable	Textile cable: Black/Grey 180 cm, Replaceable Switch: On the fixture
Light source	E27 - not included, Max. 60W Can not be dimmed

Features
Adjustable lamp head and arm
Lights both up and down
On/off button behind lamp head
Work light in the kitchen or as a bedside light

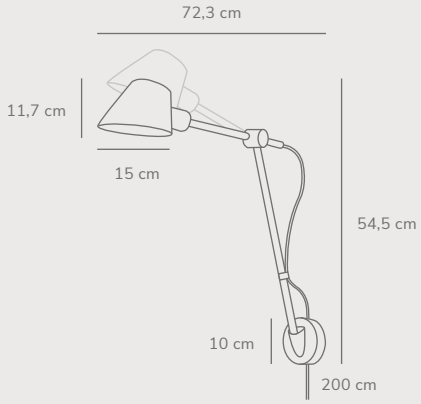

Black 48185003
Aluminium/Plastic

Grey 48185010
Aluminium/Plastic

Stay Table lamp *By Maria Berntsen*

Masterbox	Qty. 2
Size	H: 47 cm, Shade Ø: 14,5 cm, Tube Ø: 1,2 cm, Base Ø: 20 cm, Shade H: 9 cm, Tilt angel: 90°
IP Class	IP20, Class 2 (Double insulated)
Cable	Textile cable: Black/Grey 180 cm, non replaceable Switch: On the fixture
Light source	LED Module - 14,5W LED, 700 Lumen, 2700 Kelvin, 20000 Hours, RA 80, Beamangle 100°, Has built-in dimmable light source with button or touch

Features
Adjustable lamp head
Touch on/off and dimming
Award winning design
Adjustable in lamp arm

Black 2020445003
Aluminium/Plastic

Grey 2020445010
Aluminium/Plastic

Stay Table lamp *By Maria Berntsen*

Masterbox	Qty. 2
Size	H: 53,1 cm, D: 58,7 cm, Shade Ø: 15 cm, Tube Ø: 1,57 cm, Base Ø: 20 cm, Shade H: 11,7 cm
IP Class	IP20, Class 2 (Double insulated)
Cable	Textile cable: Black/Grey 250 cm, non replaceable Switch: On the fixture
Light source	E27 - not included, Max. 60W Can not be dimmed

Features
Adjustable lamp head and arm
Light both up and down
On/off button behind lamp head
Perfect as a desk/work light

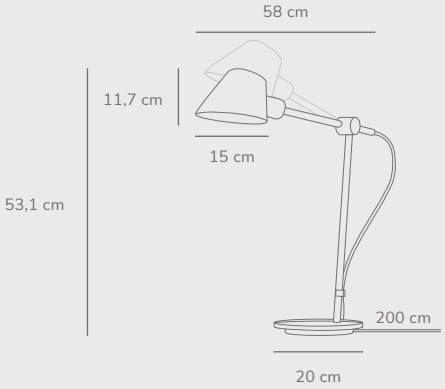

Black 2020464003
Aluminium/Plastic

Grey 2020464010
Aluminium/Plastic

Stay Floor lamp *By Maria Berntsen*

Masterbox	Qty. 1
Size	H: 129,2 cm, D: 58,7 cm, Shade Ø: 15 cm, Tube Ø: 1,57 cm, Base Ø: 25 cm, Shade H: 11,7 cm
IP Class	IP20, Class 2 (Double insulated)
Cable	Textile cable: Black/Grey 250 cm, non replaceable Switch: On the fixture
Light source	E27 - not included, Max. 60W Can not be dimmed

Features
Adjustable lamp head and top arm
Light both up and down
On/off button behind lamp head
Perfect as reading light

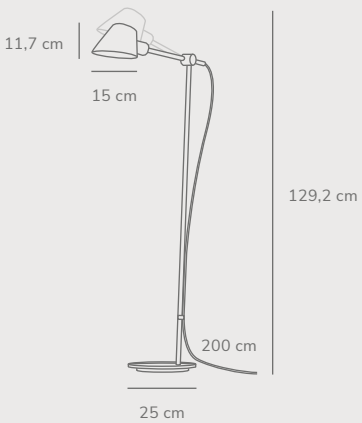

Black 2120703003
Aluminium/Plastic

Grey 2120703010
Aluminium/Plastic

Stay 3-Spot Pendant *By Maria Berntsen*

Masterbox	Qty. 3
Size	H: 12 cm, Ø: 60 cm, Shade Ø: 15,8 cm,
IP Class	IP20, Class 2 (Double insulated)
Cable	Textile cable: Black/Grey 300 cm, non replaceable
Light source	E27 - not included, Max. 28W Can be dimmed by choosing a dimmable bulb

Features
Beautiful centrepiece pendant - perfect above a dining table
Satin soft, matt surface
Lights both up and down

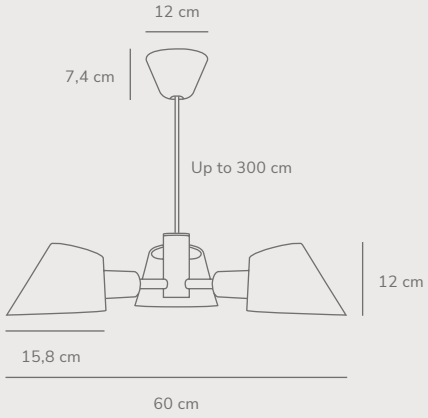

EXEMPT

White/Black 46195001
Plastic/Bamboo

1st touch 300lm
2nd touch 200lm
3rd touch 100lm

Strap To Go Battery light *By Bjørn+Balle*

Masterbox	Qty. 3
Size	H: 14,7 cm, Shade Ø: 14,7 cm, Base Ø: 15,5 cm,
IP Class	IP54, Class 3 (12V)
Cable	Plastic cable: Black 100 cm, replaceable
	Switch: On the base
Light source	LED Module - 2,5W LED, 300 Lumen, 2700 Kelvin, 30000 Hours, RA 80,
	Beamangle 240°, Has built-in dimmable light source with Moodmaker™ functionality

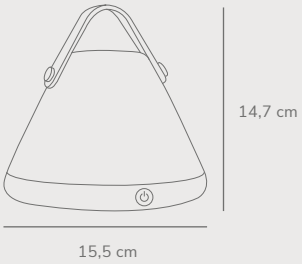

Features
Portable table lamp
Can be used outdoor
3-step dimming
Charging with USB mini cable
5 year LED guarantee

Brushed steel 2020025001
Glass/Metal

Strap 16 Table lamp *By Bjørn+Balle*

Masterbox	Qty. 3
Size	H: 43,7 cm, Shade Ø: 16,5 cm, Tube Ø: 1,2 cm, Base Ø: 14 cm, Shade H: 15,5 cm
IP Class	IP20, Class 2 (Double insulated)
Cable	Textile cable: White 250 cm, non replaceable
	Switch: On the cable
Light source	G9 - not included, Max. 25W
	Can not be dimmed

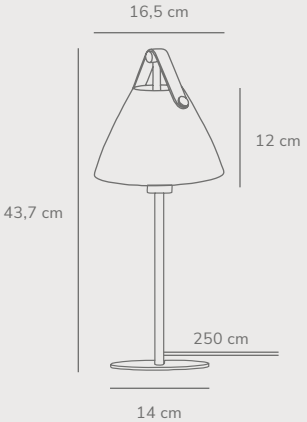

Features
Material mix opalized glass, leather and metal
Nordic style
Incl. black and neutral coloured leather strap
Material mix - glass and leather
Soft and diffused light

White 46205001
Metal/Leather

Black 46205003
Metal/Leather

Strap Table lamp *By Bjørn+Balle*

Masterbox	Qty. 3
Size	H: 55 cm, Shade Ø: 25 cm, Tube Ø: 1,57 cm, Base Ø: 17 cm, Shade H: 15,5 cm
IP Class	IP20, Class 2 (Double insulated)
Cable	Textile cable: White/Black 180 cm, non replaceable Switch: On the bulb base
Light source	E27 - not included, Max. 40W Can not be dimmed

Features
Industrial look
Nordic style
Incl. black and neutral coloured leather strap
Material mix - metal and leather

White 46234001
Metal/Leather

Black 46234003
Metal/Leather

Strap Floor lamp *By Bjørn+Balle*

Masterbox	Qty. 2
Size	H: 153,7 cm, Shade Ø: 36 cm, Tube Ø: 1,57 cm, Base Ø: 30 cm, Shade H: 34 cm
IP Class	IP20, Class 2 (Double insulated)
Cable	Textile cable: White/Black 180 cm, non replaceable Switch: On the fixture
Light source	E27 - not included, Max. 40W Can not be dimmed

Features
Industrial look
Nordic style
Material mix - metal and leather

White 84291001
Metal/Leather

Black 84291003
Metal/Leather

Strap 15 Wall light *By Bjørn+Balle*

Masterbox	Qty. 3
Size	H: 17 cm, D: 21,5 cm, Shade Ø: 16,5 cm,
	Tube Ø: 1,6 cm, Base Ø: 12,3 cm, Shade H: 17 cm
IP Class	IP20, Class 2 (Double insulated)
Cable	Plastic cable: White/Black 180 cm, replaceable
	Switch: On the fixture
Light source	GU10 - not included, Max. 8W
	Can not be dimmed

Features
Industrial look
Nordic style
Incl. black and neutral coloured leather strap
Material mix - metal and leather

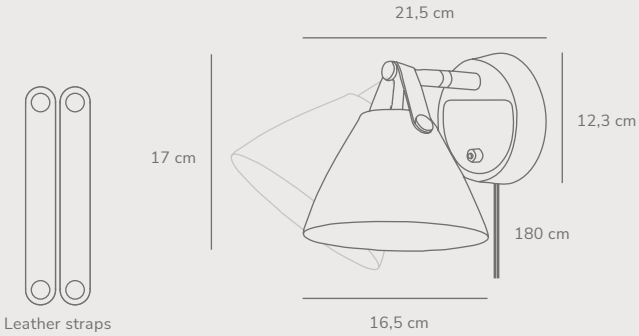

White 84303001
Metal/Leather

Black 84303003
Metal/Leather

Strap 16 Pendant *By Bjørn+Balle*

Masterbox	Qty. 3
Size	H: 17 cm, Shade Ø: 16,5 cm,
IP Class	IP20, Class 2 (Double insulated)
Cable	Textile cable: White/Black 300 cm, non replaceable
Light source	GU10 - not included, Max. 40W
	Can be dimmed by choosing a dimmable bulb

Features
Industrial look
Nordic style
Incl. black and neutral coloured leather strap
Material mix - metal and leather

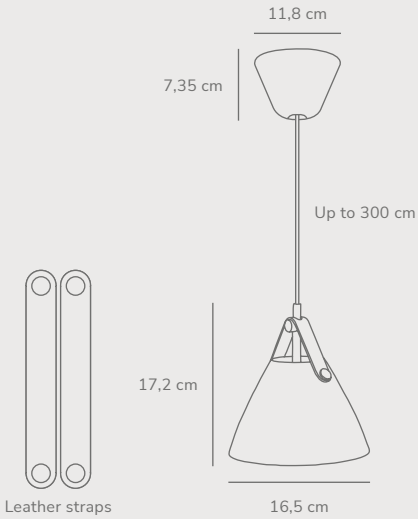

White 84333001
Metal/Leather

Black 84333003
Metal/Leather

Beige 84333009
Metal/Leather

White 84313001
Glass/Leather

Strap 27 Pendant *By Bjørn+Balle*

Masterbox	Qty. 3
Size	H: 27,2 cm, Shade Ø: 27 cm,
IP Class	IP20, Class 2 (Double insulated)
Cable	Textile cable: White/Black 300 cm, non replaceable
Light source	E27 - not included, Max. 40W
	Can be dimmed by choosing a dimmable bulb

Features
Industrial look
Nordic style
Incl. black and neutral coloured leather strap
Material mix - metal and leather
Material mix - glass and leather

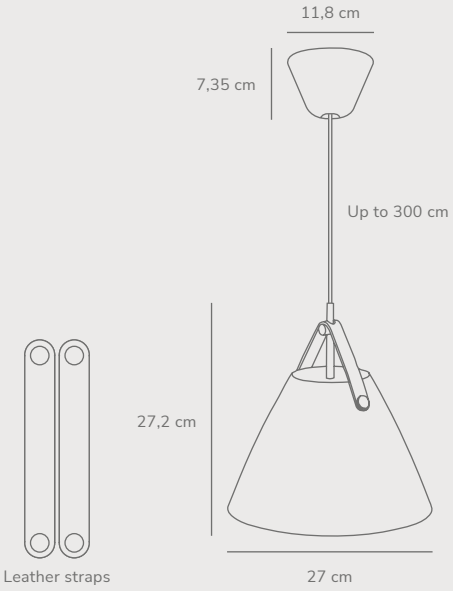

White 84343001
Metal/Leather

Black 84343003
Metal/Leather

Beige 84343009
Metal/Leather

Strap 36 Pendant *By Bjørn+Balle*

Masterbox	Qty. 2
Size	H: 37 cm, Shade Ø: 36 cm, Shade H: 36,4 cm
IP Class	IP20, Class 2 (Double insulated)
Cable	Textile cable: White/Black 300 cm, non replaceable
Light source	E27 - not included, Max. 40W
	Can be dimmed by choosing a dimmable bulb

Features
Industrial look
Nordic style
Incl. black and neutral coloured leather strap
Material mix - metal and leather

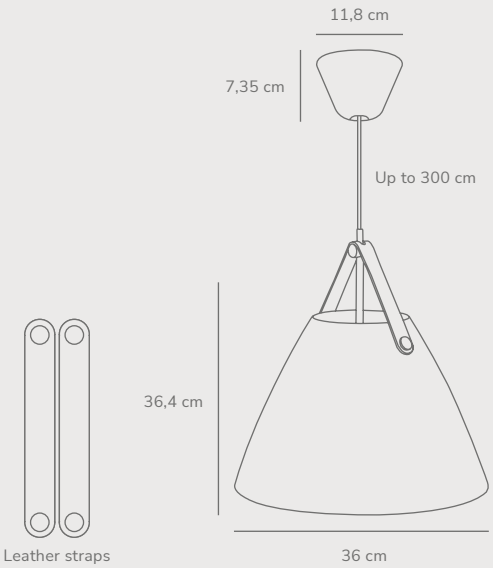

White 84353001
Metal/Leather

Black 84353003
Metal/Leather

Beige 84353009
Metal/Leather

Strap 48 Pendant *By Bjørn+Balle*

Masterbox	Qty. 1
Size	H: 48 cm, Shade Ø: 48 cm, Shade H: 48,8 cm
IP Class	IP20, Class 2 (Double insulated)
Cable	Textile cable: White/Black 300 cm, non replaceable
Light source	E27 - not included, Max. 40W Can be dimmed by choosing a dimmable bulb

Features
Industrial look
Nordic style
Incl. black and neutral coloured leather strap
Material mix - metal and leather

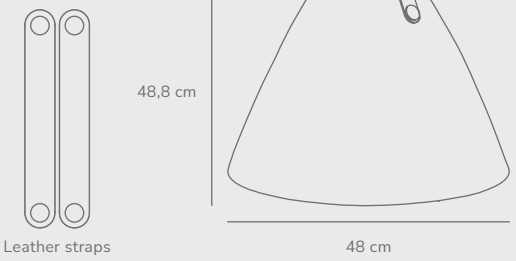

Black 84363003
Metal/Leather

Strap 68 Pendant *By Bjørn+Balle*

Masterbox	Qty. 1
Size	H: 60,7 cm, Shade Ø: 68 cm,
IP Class	IP20, Class 2 (Double insulated)
Cable	Textile cable: Black 300 cm, non replaceable
Light source	E27 - not included, Max. 60W Can be dimmed by choosing a dimmable bulb

Features
Industrial look
Nordic style
Incl. black and neutral coloured leather strap
Material mix - metal and leather

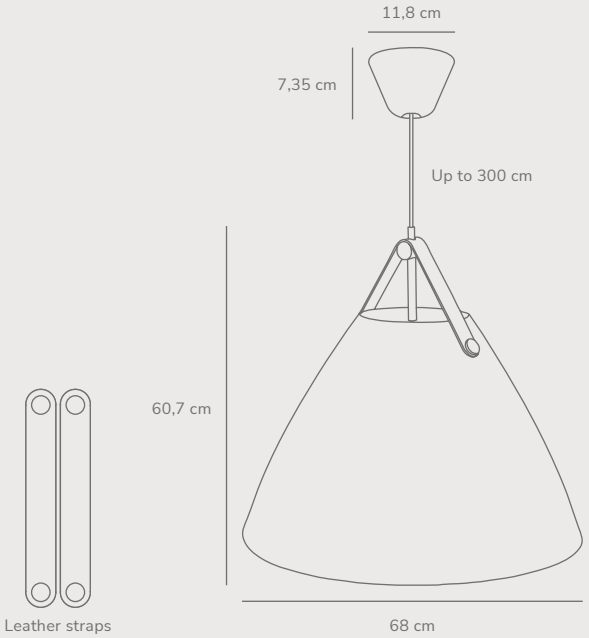

White 2220075001
Metal/Plastic

Black 2220075003
Metal/Plastic

Versale Table lamp *By Anker Studio*

Masterbox	Qty. 3
Size	H: 45 cm, W: 22 cm, L: 22 cm, Shade Ø: 22 cm, Tube Ø: 1,25 cm, Base Ø: 19 cm, Shade H: 6 cm, Tilt angel: 65°
IP Class	IP20, Class 2 (Double insulated)
Cable	Textile cable: White/Black 250 cm, non replaceable Switch: On the cable
Light source	G9 - not included, Max. 3x3W LED Can not be dimmed

Features
Scandinavian minimalism
Soft shape with a contrast detail
Soft and diffused light
Shade can tilt up and down

White 2220064001
Metal/Plastic

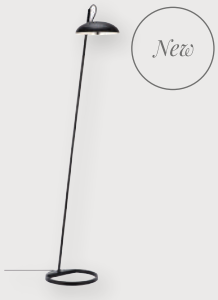

Black 2220064003
Metal/Plastic

Versale Floor lamp *By Anker Studio*

Masterbox	Qty. 2
Size	H: 140 cm, W: 28 cm, L: 28 cm, Shade Ø: 22 cm, Shade H: 6 cm, Tube Ø: 1,45 cm, Base Ø: 28 cm, Tilt angel: 65°
IP Class	IP20, Class 2 (Double insulated)
Cable	Textile cable: White/Black 250 cm, non replaceable Switch: On the cable
Light source	G9 - not included, Max. 3x3W LED Can not be dimmed

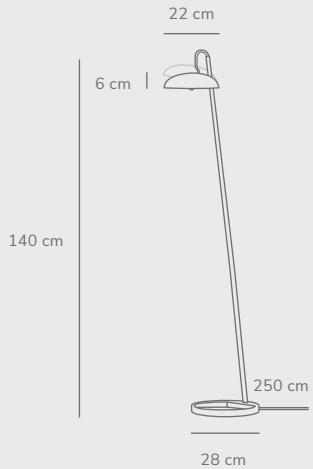

Features
Scandinavian minimalism
Soft shape with a contrast detail
Soft and diffused light
Shade can tilt up and down

White 2220053001
Metal/Plastic

Black 2220053003
Metal/Plastic

Brown 2220053009
Metal/Plastic

Versale Pendant *By Anker Studio*

Masterbox	Qty. 3
Size	H: 41 cm, W: 49,5 cm, L: 49,5 cm, Shade Ø: 49,5 cm,
IP Class	IP20, Class 2 (Double insulated)
Cable	Textile cable: White/Black/Brown 300 cm, non replaceable
Light source	E27 - not included, Max. 2x15W LED Can be dimmed by choosing a dimmable bulb

Features
Scandinavian minimalism
Soft shape with a contrast detail
Soft and diffused light

Black 83083003
Metal/Plastic

Grey 83083010
Metal/Plastic

Beige 83083009
Metal/Plastic

Copper 83083030
Metal/Plastic

Artist 25 Pendant *By Bønnelycke MDD*

Masterbox	Qty. 2
Size	H: 6 cm, Shade Ø: 25 cm,
IP Class	IP20, Class 2 (Double insulated)
Cable	Textile cable: Black/Grey/Beige 300 cm, non replaceable
Light source	LED Module - 14W LED, 1000 Lumen, 3000 Kelvin, 30000 Hours, RA 80, Beamangle 120°, Has built-in dimmable light source for wall dimmer

Features
Modern classic
Slim and timeless design
Dimmable
Soft and diffused light
5 year LED guarantee

Black 83093003
Metal/Plastic

Grey 83093010
Metal/Plastic

Beige 83093009
Metal/Plastic

Copper 83093030
Metal/Plastic

Artist 40 Pendant *By Bønnelycke MDD*

Masterbox	Qty. 1
Size	H: 6 cm, Shade Ø: 40 cm,
IP Class	IP20, Class 2 (Double insulated)
Cable	Textile cable: Black/Grey/Beige 300 cm, non replaceable
Light source	LED Module - 24W LED, 1600 Lumen, 3000 Kelvin, 30000 Hours, RA 80, Beamangle 120°, Has built-in dimmable light source for wall dimmer

Features
Modern classic
Slim and timeless design
Dimmable
Soft and diffused light
5 year LED guarantee
Red Dot and iF design awards 2017

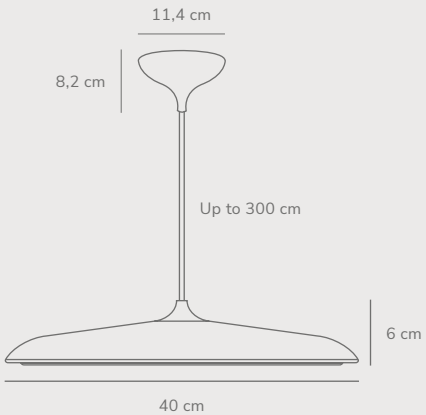

Black 84243003
Metal/Plastic

Aver 30 Pendant *By Carlo Volf*

Masterbox	Qty. 2
Size	H: 35 cm, Shade Ø: 30 cm,
IP Class	IP20, Class 2 (Double insulated)
Cable	Textile cable: Black 300 cm, non replaceable
Light source	E27 - not included, Max. 60W
	Can be dimmed by choosing a dimmable bulb

Features
Provides a good light
Visible bulb
Sculptural and fills out the space/room

Black 84253003
Metal/Plastic

Aver 40 Pendant *By Carlo Volf*

Masterbox	Qty. 1
Size	H: 45,5 cm, Shade Ø: 40 cm,
IP Class	IP20, Class 2 (Double insulated)
Cable	Textile cable: Black 300 cm, non replaceable
Light source	E27 - not included, Max. 60W
	Can be dimmed by choosing a dimmable bulb

Features
Provides a good light
Visible bulb
Sculptural and fills out the space/room

Black 84263003
Metal/Plastic

Aver 50 Pendant *By Carlo Volf*

Masterbox	Qty. 1
Size	H: 54,5 cm, Shade Ø: 50 cm,
IP Class	IP20, Class 2 (Double insulated)
Cable	Textile cable: Black 300 cm, non replaceable
Light source	E27 - not included, Max. 60W Can be dimmed by choosing a dimmable bulb

Features
Provides a good light
Visible bulb
Sculptural and fills out the space/room

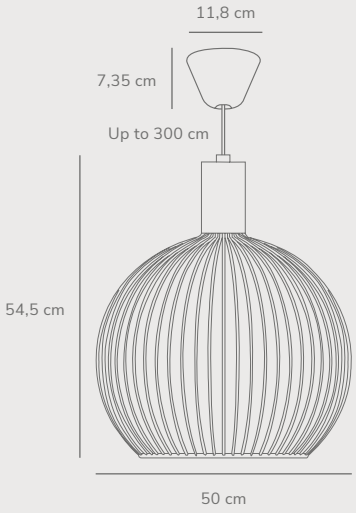

New

Black 2220473003
Metal/Metal

Beau 50 Pendant *By Sofie Lefèvre*

Masterbox	Qty. 3
Size	H: 8,5 cm, L: 50 cm,
IP Class	IP20, Class 2 (Double insulated)
Cable	Textile cable: Black 300 cm, non replaceable
Light source	S14S - included, Max. 8W, 750 Lumen, 2700 Kelvin, 25000 Hours, RA 80, Beamangle 360°, Can be dimmed by choosing a dimmable bulb

Features
Scandinavian minimalism
Slim design
Beautiful above a dining table or in the kitchen
Replaceable bulb
Bulb included

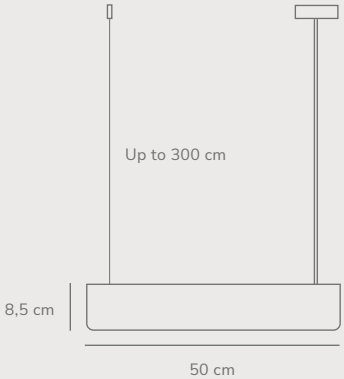

New

Black 2220483003
Metal/Metal

Beau 100 Pendant *By Sofie Lefèvre*

Masterbox	Qty. 3
Size	H: 8,5 cm, L: 100 cm,
IP Class	IP20, Class 2 (Double insulated)
Cable	Textile cable: Black 300 cm, non replaceable
Light source	S14S - included, Max. 15W, 1500 Lumen, 2700 Kelvin, 25000 Hours, Beamangle 360°, Can be dimmed by choosing a dimmable bulb

Features
Scandinavian minimalism
Slim design
Beautiful above a dining table or in the kitchen
Replaceable bulb
Bulb included

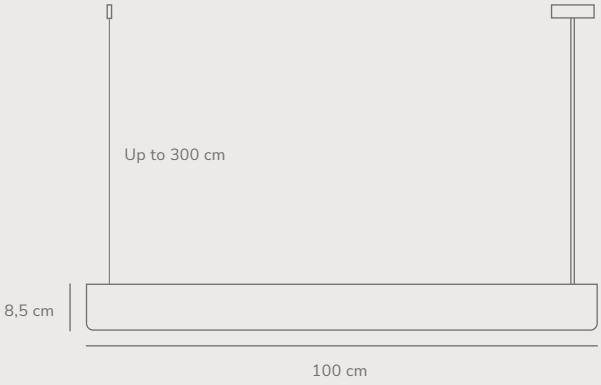

Black 45053003
Metal/Plastic

Belly 29 Pendant *By Bønnelycke MDD*

Masterbox	Qty. 2
Size	H: 28 cm, Shade Ø: 29 cm,
IP Class	IP20, Class 2 (Double insulated)
Cable	Textile cable: Black 300 cm, non replaceable
Light source	E27 - not included, Max. 60W Can be dimmed by choosing a dimmable bulb

Features
Contemporary design
Directs light both up and down
Handcrafted shade

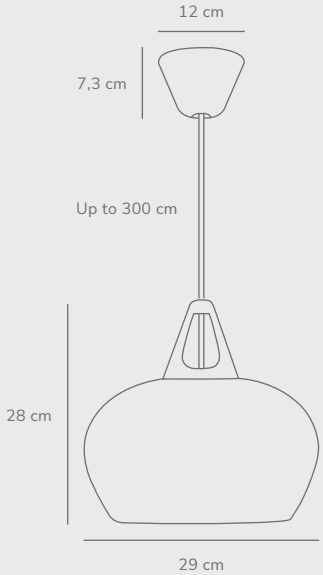

reddot award 2018 winner

Black 45063003
Metal/Plastic

Belly 38 Pendant *By Bønnelycke MDD*

Masterbox	Qty. 1
Size	H: 33 cm, Shade Ø: 38 cm,
IP Class	IP20, Class 2 (Double insulated)
Cable	Textile cable: Black 300 cm, non replaceable
Light source	E27 - not included, Max. 60W
	Can be dimmed by choosing a dimmable bulb

Features
Contemporary design
Directs light both up and down
Handcrafted shade
Red Dot Design Award 2018

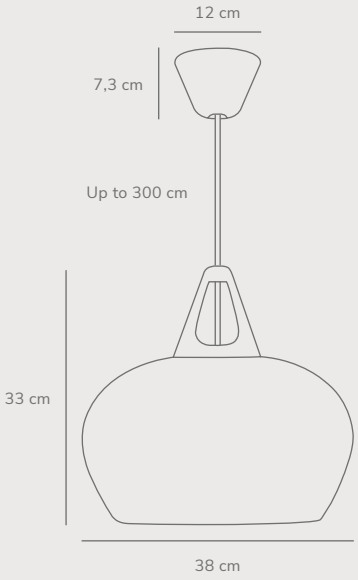

Black 45073003
Metal/Plastic

Belly 46 Pendant *By Bønnelycke MDD*

Masterbox	Qty. 1
Size	H: 38 cm, Shade Ø: 46 cm,
IP Class	IP20, Class 2 (Double insulated)
Cable	Textile cable: Black 300 cm, non replaceable
Light source	E27 - not included, Max. 60W
	Can be dimmed by choosing a dimmable bulb

Features
Contemporary design
Directs light both up and down
Handcrafted shade

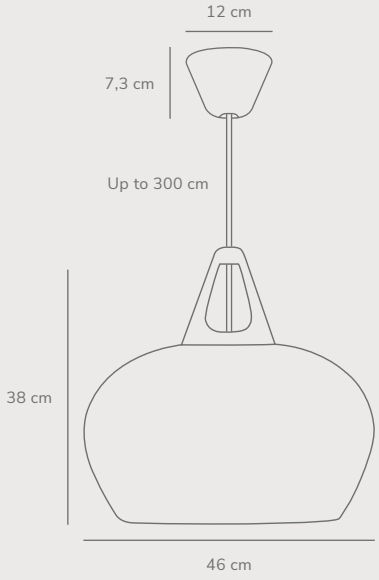

White 2220103060
Tyvek/Metal

Hill Pendant *By Asger Risborg*

Masterbox	Qty. 3
Size	H: 22 cm, W: 85 cm, L: 85 cm, Shade Ø: 85 cm,
IP Class	IP20, Class 2 (Double insulated)
Cable	Textile cable: White 300 cm, non replaceable
Light source	E27 - not included, Max. 3x25W
	Can be dimmed by choosing a dimmable bulb

Features
Modern Japandi style
Modern, yet timeless design
Soft and diffused light
Airy design language

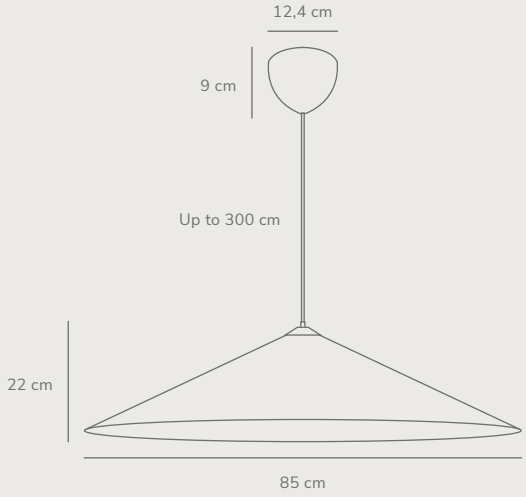

Black 2220293003
Metal/Plastic

Brown 2220293009
Metal/Plastic

Maple Pendant *By Charlotte Høncke Design*

Masterbox	Qty. 3
Size	H: 19 cm, Shade Ø: 55 cm,
IP Class	IP20, Class 2 (Double insulated)
Cable	Textile cable: Black/White 300 cm, non replaceable
Light source	E27 - not included, Max. 40W
	Can be dimmed by choosing a dimmable bulb

Features
Modern Italian style
Organic shape

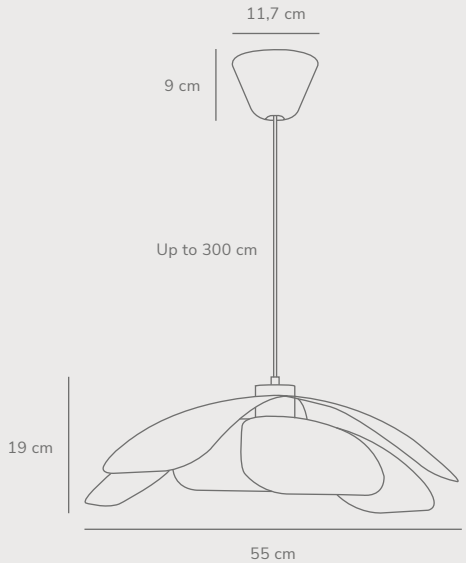

reddot winner 2022

White 2120653001
Aluminium/Plastic

Black 2120653003
Aluminium/Plastic

Mobile Pendant *By Maria Berntsen*

Masterbox	Qty. 1
Size	H: 36,8 cm, Shade Ø: 45 cm, Tube Ø: 0,95 cm,
IP Class	IP20, Class 2 (Double insulated)
Cable	Textile cable: White/Black 300 cm, non replaceable
Light source	G9 - not included, Max. 3X5W LED Can be dimmed by choosing a dimmable bulb

Features
Satin soft, matt surface
Opalized top shade reflects a diffused and glare-free light
Possible to center and diffuse light output

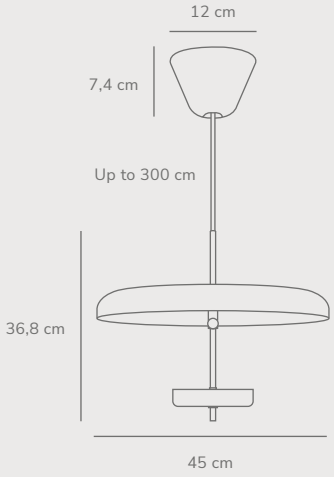

New

White 2220433001
Glass/Metal

Navone 20 Pendant *By Sofie Lefèvre*

Masterbox	Qty. 3
Size	H: 17 cm, Shade Ø: 20 cm,
IP Class	IP20, Class 2 (Double insulated)
Cable	Textile cable: White 300 cm, non replaceable
Light source	E27 - not included, Max. 40W Can be dimmed by choosing a dimmable bulb

Features
Timeless and classic design with modern details
Organic shape
Beautiful material mix of opal glass and brass

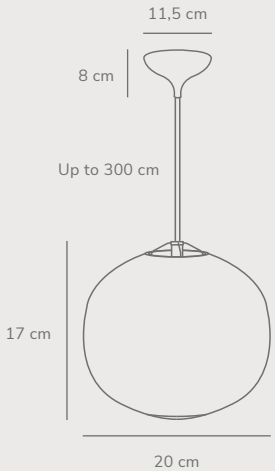

New

White 2220443001
Glass/Metal

Navone 30 Pendant *By Sofie Lefèvre*

Masterbox	Qty. 2
Size	H: 25,5 cm, Shade Ø: 30 cm,
IP Class	IP20, Class 2 (Double insulated)
Cable	Textile cable: White 300 cm, non replaceable
Light source	E27 - not included, Max. 40W
	Can be dimmed by choosing a dimmable bulb

Features
Timeless and classic design with modern details
Organic shape
Beautiful material mix of opal glass and brass

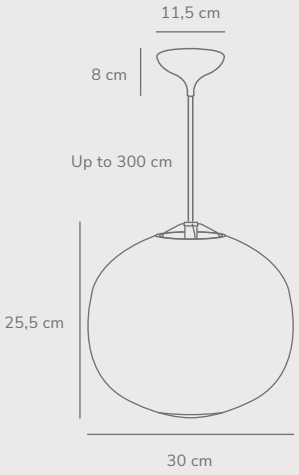

New

Black 2220123003
Metal/Plastic

Norbi 30 Pendant *By Bjørn+Balle*

Masterbox	Qty. 2
Size	H: 36,3 cm, Shade Ø: 30 cm,
IP Class	IP20, Class 2 (Double insulated)
Cable	Textile cable: Black 300 cm, non replaceable
Light source	E27 - not included, Max. 60W
	Can be dimmed by choosing a dimmable bulb

Features
Minimalistic and industrial design
Adjustable lamp shade for a centered or diffused light
Cool contrast between matte shade and shiny steel detail

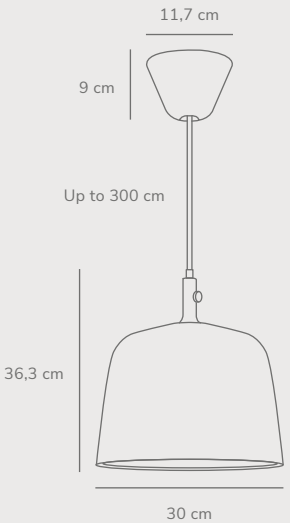

Black 2220133003
Metal/Plastic

Norbi 40 Pendant *By Bjørn+Balle*

Masterbox	Qty. 2
Size	H: 43,4 cm, Shade Ø: 40 cm,
IP Class	IP20, Class 2 (Double insulated)
Cable	Textile cable: Black 300 cm, non replaceable
Light source	E27 - not included, Max. 60W Can be dimmed by choosing a dimmable bulb

Features
Minimalistic and industrial design
Adjustable lamp shade for a centered or diffused light
Cool contrast between matte shade and shiny steel detail

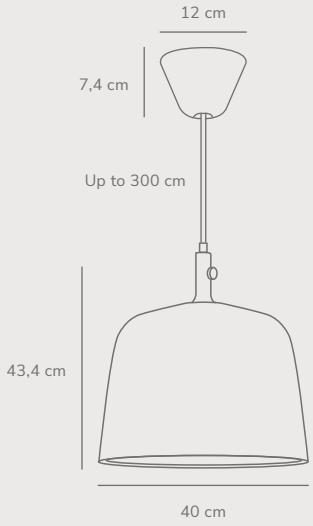

White 2120503001
Metal/Plastic

Black 2120503003
Metal/Plastic

Nono 23,5 Pendant *By Bønnelycke MDD*

Masterbox	Qty. 3
Size	H: 24,8 cm, Shade Ø: 23,5 cm,
IP Class	IP20, Class 2 (Double insulated)
Cable	Textile cable: White/Black 300 cm, non replaceable
Light source	E27 - not included, Max. 40W Can be dimmed by choosing a dimmable bulb

Features
Satin soft, matt surface
Diffuser creates a soft and glare-free light

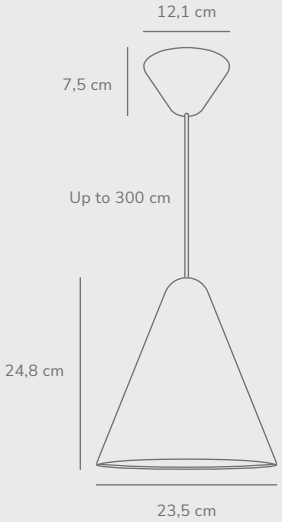

White 2120523001
Metal/Plastic

Black 2120523003
Metal/Plastic

Nono 49 Pendant *By Bønnelycke MDD*

Masterbox	Qty. 3
Size	H: 24,8 cm, Shade Ø: 49 cm,
IP Class	IP20, Class 2 (Double insulated)
Cable	Textile cable: White/Black 300 cm, non replaceable
Light source	E27 - not included, Max. 50W
	Can be dimmed by choosing a dimmable bulb

Features
Satin soft, matt surface
Diffuser creates a soft and glare-free light

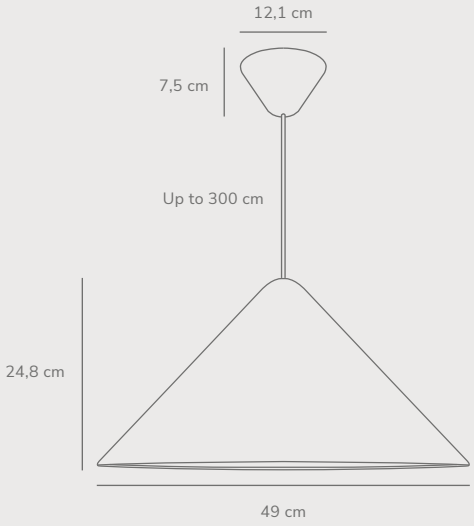

White 2120803001
Metal/Wood

Black 2120803003
Metal/Wood

Copper 2120803030
Metal/Wood

Brushed steel 2120803032
Metal/Wood

Nori 18 Pendant *By Bjørn+Balle*

Masterbox	Qty. 3
Size	H: 26,5 cm, Shade Ø: 18 cm,
IP Class	IP20, Class 2 (Double insulated)
Cable	Textile cable: White/Black 300 cm, non replaceable
Light source	E27 - not included, Max. 60W
	Can be dimmed by choosing a dimmable bulb

Features
Organic shape
Material mix - metal and wood
Beautiful to mix sizes and shapes

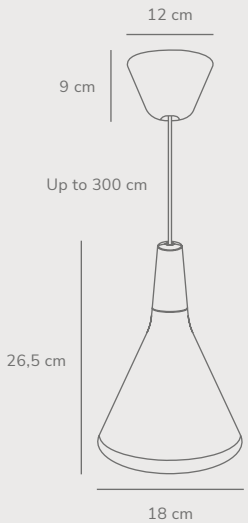

White 2120843001
Glass/Wood

Smoked 2120843047
Glass/Wood

Nori 18 Pendant *By Bjørn+Balle*

Masterbox	Qty. 3
Size	H: 26,5 cm, Shade Ø: 18 cm,
IP Class	IP20, Class 2 (Double insulated)
Cable	Textile cable: White/Black 300 cm, non replaceable
Light source	E27 - not included, Max. 60W
	Can be dimmed by choosing a dimmable bulb

Features
Organic shape
Material mix - glass and wood
Beautiful to mix sizes and shapes

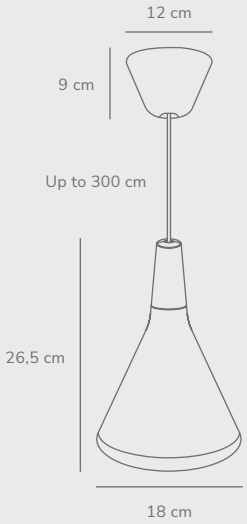

White 2120813001
Metal/Wood

Black 2120813003
Metal/Wood

Copper 2120813030
Metal/Wood

Brushed steel 2120813032
Metal/Wood

Nori 27 Pendant *By Bjørn+Balle*

Masterbox	Qty. 3
Size	H: 24,5 cm, Shade Ø: 27 cm,
IP Class	IP20, Class 2 (Double insulated)
Cable	Textile cable: White/Black 300 cm, non replaceable
Light source	E27 - not included, Max. 40W
	Can be dimmed by choosing a dimmable bulb

Features
Beautiful alone or in a cluster of different sizes
Cool material mix of metal and wood

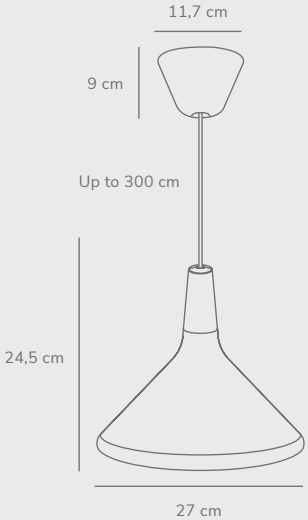

White 2120853001
Glass/Wood

Smoked 2120853047
Glass/Wood

Nori 27 Pendant *By Bjørn+Balle*

Masterbox	Qty. 3
Size	H: 24,5 cm, Shade Ø: 27 cm,
IP Class	IP20, Class 2 (Double insulated)
Cable	Textile cable: White/Black 300 cm, non replaceable
Light source	E27 - not included, Max. 40W Can be dimmed by choosing a dimmable bulb

Features
Beautiful alone or in a cluster of different sizes
Cool material mix of smoked glass and wood

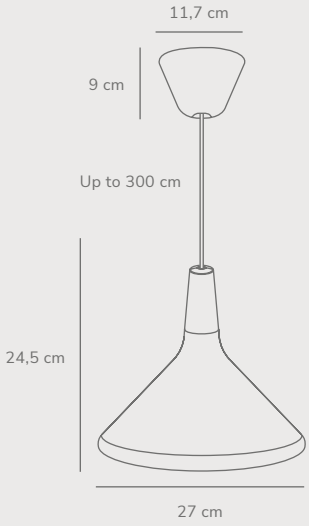

White 2120823001
Metal/Wood

Black 2120823003
Metal/Wood

Copper 2120823030
Metal/Wood

Brushed steel 2120823032
Metal/Wood

Nori 39 Pendant *By Bjørn+Balle*

Masterbox	Qty. 2
Size	H: 22 cm, Shade Ø: 39 cm,
IP Class	IP20, Class 2 (Double insulated)
Cable	Textile cable: White/Black 300 cm, non replaceable
Light source	E27 - not included, Max. 40W Can be dimmed by choosing a dimmable bulb

Features
Beautiful alone or in a cluster of different sizes
Cool material mix of metal and wood

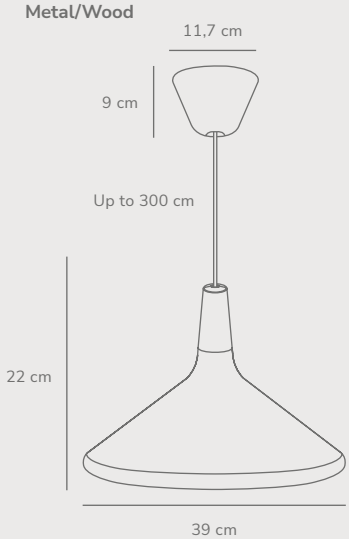

White 2220033001
Metal/Plastic

Black 2220033003
Metal/Plastic

Tullio Pendant *By Anker Studio*

Masterbox	Qty. 1
Size	H: 73 cm, W: 60 cm, Shade Ø: 25 cm, Shade H: 12,5 cm, Tube Ø: 1,3 cm,
IP Class	IP20, Class 2 (Double insulated)
Cable	Textile cable: White/Black 300 cm, non replaceable
Light source	E14 - not included, Max. 3x25W Can be dimmed by choosing a dimmable bulb

Features
Scandinavian minimalism
Sculptural design
Soft and diffused light

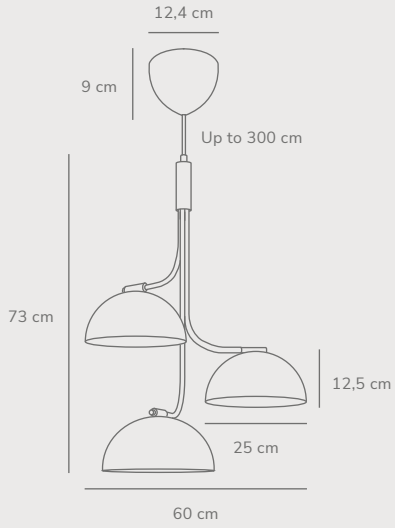

White 2120095001 Metal/Plastic
Black 2120095003 Metal/Plastic
Grey 2120095010 Metal/Plastic
Beige 2120095009 Metal/Plastic
Brown 2120095018 Metal/Plastic
Green 2120095023 Metal/Plastic
Chrome 2120095033 Metal/Plastic
Rose 2120095057 Metal/Plastic

Align Table lamp *By Maria Berntsen*

Masterbox	Qty. 3
Size	H: 33,5 cm, Shade Ø: 22 cm, Shade H: 12 cm, Tilt angel: 340°
IP Class	IP20, Class 2 (Double insulated)
Cable	Textile cable: White/Black/Grey 250 cm, non replaceable Switch: On the cable
Light source	E27 - not included, Max. 25W Can not be dimmed

Features
Satin soft, matt surface
Beautiful brass details
Movable shade for a playful look and changeable light

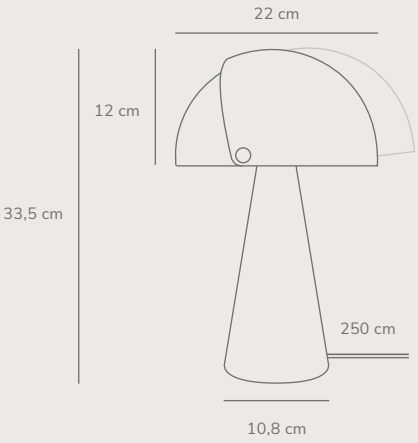

Burnished brass 2220155061
Metal/Plastic

Anthracite 2220155050
Metal/Plastic

1st click on 300lm
2nd click on 200lm
3rd click on 100lm

Arcello Table lamp *By Bjørn+Balle*

Masterbox	Qty. 3
Size	H: 25 cm, Shade Ø: 14 cm, Base Ø: 8 cm,
IP Class	IP54, Class 3 (12V)
Cable	Plastic cable: Black 100 cm, replaceable Switch: Under the base
Light source	LED Module300 Lumen, 2700 Kelvin, 15000 Hours, Has built-in dimmable light source with Moodmaker™ functionality

Features
Portable and re-chargeable with included USB
Pleasant, downward-facing light
Beautiful anodized surface
5 year LED guarantee

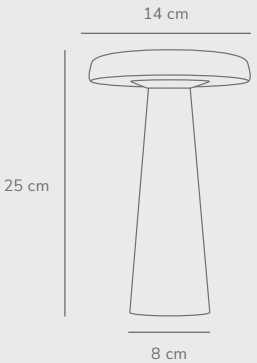

Black 75145003
Metal/Plastic

Arki Table/Wall/Clamp lamp *By Bønnelycke MDD*

Masterbox	Qty. 2
Size	H: 52 cm, Shade Ø: 20 cm, Shade H: 20 cm, Base Ø: 25 cm,
IP Class	IP20, Class 2 (Double insulated)
Cable	Plastic cable: Black 180 cm, non replaceable
	Switch: On the fixture
Light source	E27 - not included, Max. 60W
	Can not be dimmed

Features
Timeless and contemporary design
Adjustable lamp head and arm
Incl. table foot, wall bracket and clamp

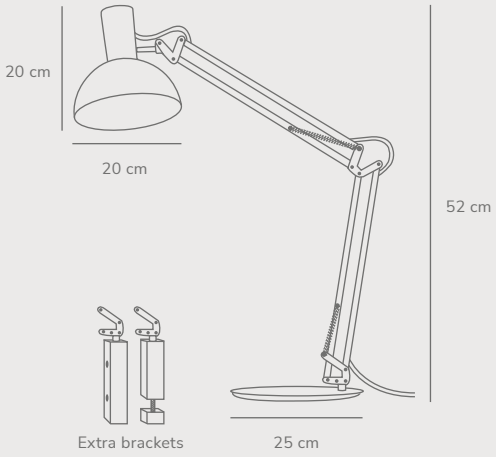

Matt black 2220275003
Marble/Metal

Matt grey 2220275010
Marble/Metal

Caché Table lamp *By Charlotte Høncke Design*

Masterbox	Qty. 2
Size	H: 49 cm, Shade Ø: 30 cm, Base Ø: 9 cm,
IP Class	IP20, Class 2 (Double insulated)
Cable	Textile cable: Black/White 250 cm, non replaceable
	Switch: On the cable
Light source	GU10 - not included, Max. 40W
	Can not be dimmed

Features
Sculptural design
Elegant material mix of metal and marble
Soft, indirect light
Movable shades

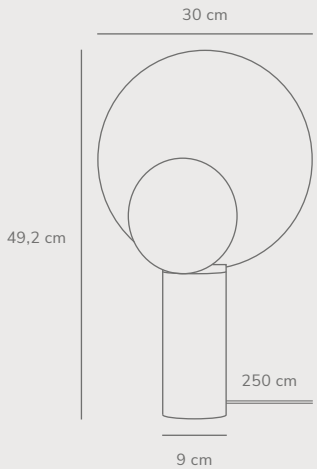

reddot winner 2021
lighting design

Opal white 2020505001
Marble/Glass

Grey 2020505010
Marble/Glass

Glossy Table lamp *By Maria Berntsen*

Masterbox	Qty. 2
Size	H: 32 cm, Shade Ø: 32 cm, Base Ø: 12 cm,
IP Class	IP20, Class 2 (Double insulated)
Cable	Textile cable: White 250 cm, non replaceable
	Switch: On the cable
Light source	E27 - not included, Max. 15W
	Can not be dimmed

Features
Sophisticated and clean design
Exclusive marble, glass and brushed brass or brushed steel
Soft, diffused light through the opalized glass
Award winning design

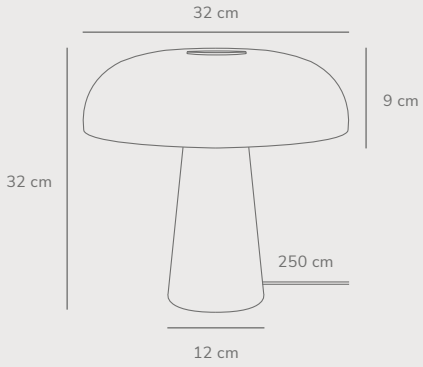

Black 2220215003
Metal/Glass

Brown 2220215009
Metal/Glass

Grey 2220215010
Metal/Glass

Hello Table lamp *By Charlotte Høncke Design*

Masterbox	Qty. 2
Size	H: 42 cm, W: 24,3 cm, D: 30 cm, Shade Ø: 30 cm,
	Base Ø: 15.5 cm,
IP Class	IP20, Class 2 (Double insulated)
Cable	Textile cable: Black/White/Grey 250 cm, non replaceable
	Switch: On the cable
Light source	E14 - not included, Max. 25W
	Can not be dimmed

Features
Soft, organic shapes
Playful and welcoming design language
Movable shade for a direct or indirect light

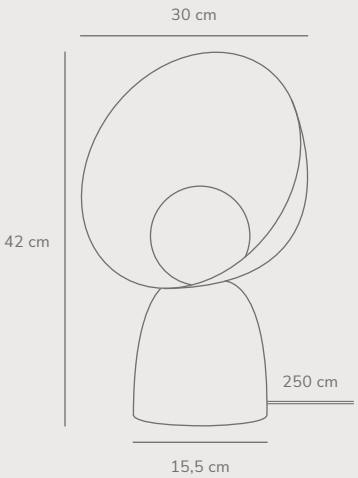

White 2220405001
Marble/Metal

Black 2220405003
Marble/Metal

Mademoiselles Table lamp *By Sofie Lefèvre*

Masterbox	Qty. 2
Size	H: 41,7 cm, Shade Ø: 32 cm, Shade H: 7 cm, Tube Ø: 1,15 cm, Base Ø: 9 cm, Tilt angel: 45°
IP Class	IP20, Class 2 (Double insulated)
Cable	Textile cable: Black/White 250 cm, non replaceable Switch: On the cable
Light source	GU10 - not included, Max. 5W Can not be dimmed

Features
Modern Italian style
Adjustable shade
Soft, indirect light
Elegant material mix of marble, brass and metal

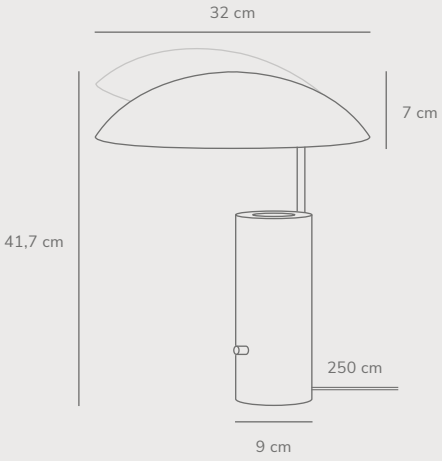

Black 2120405003
Metal/Plastic

Grey 2120405010
Metal/Plastic

Nobu Table/Wall/Clamp lamp *By Bønnelycke MDD*

Masterbox	Qty. 2
Size	H: 46,5 cm, L: 49,5 cm, Shade Ø: 10,5 cm, Tube Ø: 3 cm, Base Ø: 20 cm, Tilt angel: 80°
IP Class	IP20, Class 2 (Double insulated)
Cable	Textile cable: Black/Grey250 cm, non replaceable Switch: On the fixture
Light source	LED Module - 9W LED, 600 Lumen, 2700 Kelvin, 30000 Hours, RA 90, Has built-in dimmable light source with button or touch

Features
Dimmable on touch switch
Adjustable in both lamp head and arm
Incl. table foot, table clamp and wall bracket
Memory function
5 year LED guarantee

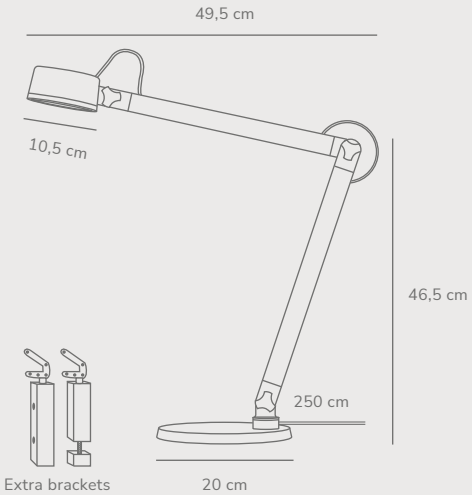

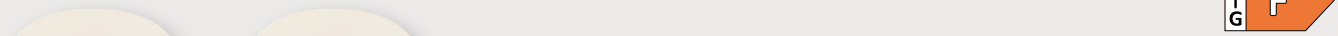

Grey 48275003
Plastic/Metal

Rosegold 48275058
Plastic/Metal

1st click on
300lm

2nd click on
200lm

3rd click on
100lm

Nuru Battery light *By Bønnelycke MDD*

Masterbox	Qty. 3
Size	H: 20 cm, Shade Ø: 15,5 cm, Base Ø: 10 cm,
IP Class	IP44, Class 3 (12V)
Cable	Plastic cable: Black 100 cm, non replaceable Switch: Under the base
Light source	LED Module - 4,8W LED, 300 Lumen, 2700 Kelvin, 30000 Hours, RA 80, Beamangle 130°, Has built-in dimmable light source with Moodmaker™ functionality

Features
Portable table lamp
Can be used outdoor
3-step dimming
Charging with USB mini
5 year LED guarantee

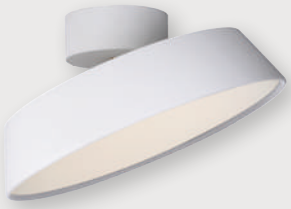

White 2220506001
Metal/Metal

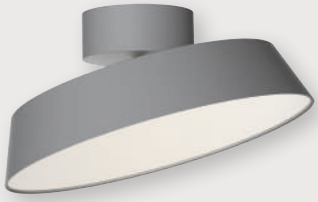

Grey 2220506010
Metal/Metal

Kaito Dim Ceiling light *By Bønnelycke MDD*

Masterbox	Qty. 3
Size	H: 11,7 cm, Shade Ø: 30 cm, Base Ø: 10,6 cm, Tilt angel: 35°
IP Class	IP20, Class 2 (Double insulated)
Light source	LED Module - 12W LED, 610 Lumen, 3000 Kelvin, 30000 Hours, RA 80, Beamangle 120°, Has built-in dimmable light source for wall dimmer

Features
Tilt joint - possible to direct light
Dimmable
Soft and diffused light
Elegant brass detail
5 year LED guarantee

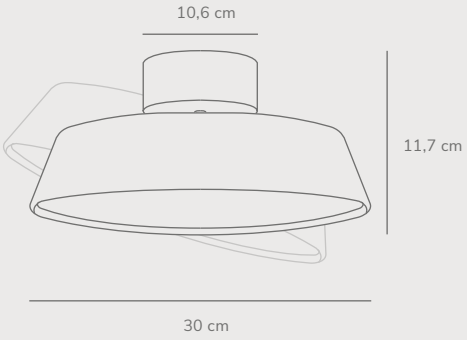

White 2220516001
Metal/Metal

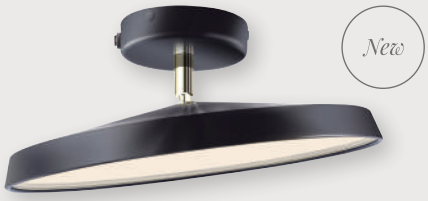

Black 2220516003
Metal/Metal

Kaito Pro 30 Ceiling light *By Bønnelycke MDD*

Masterbox	Qty. 3
Size	H: 11,7 cm, Shade Ø: 30 cm, Base Ø: 10,6 cm, Tilt angel: 35°
IP Class	IP20, Class 2 (Double insulated)
Light source	LED Module - 14W LED, 1000 Lumen, 3000 Kelvin, 30000 Hours, RA 80, Beamangle 120°, Has built-in dimmable light source for wall dimmer

Features
Tilt joint - possible to direct light
Dimmable
Soft and diffused light
Slim design
5 year LED guarantee

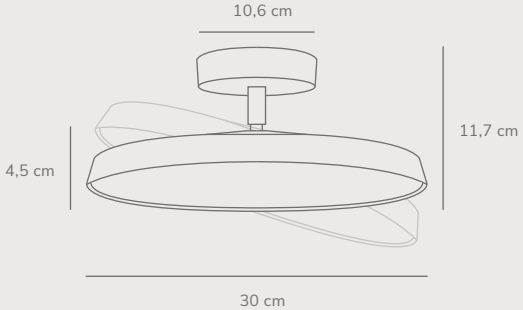

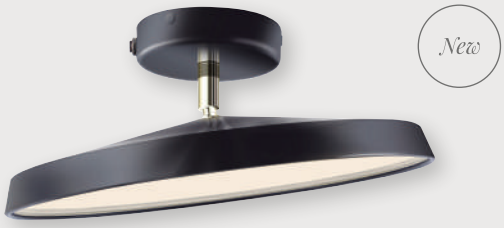

White 2220526001
Metal/Metal

Black 2220526003
Metal/Metal

Kaito Pro 40 Ceiling light *By Bønnelycke MDD*

Masterbox	Qty. 3
Size	H: 11,7 cm, Shade Ø: 38,5 cm, Base Ø: 10,6 cm, Tilt angel: 35°
IP Class	IP20, Class 2 (Double insulated)
Light source	LED Module - 24W LED, 1600 Lumen, 3000 Kelvin, 30000 Hours, RA 80, Beamangle 120°, Has built-in dimmable light source for wall dimmer

Features
Tilt joint - possible to direct light
Dimmable
Soft and diffused light
Slim design
5 year LED guarantee

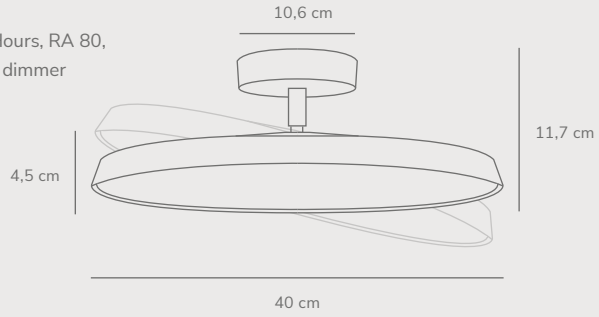

White 2120456001
Metal/Plastic

Black 2120456003
Metal/Plastic

Mimi 2-Spot Ceiling light *By Bønnelycke MDD*

Masterbox	Qty. 3
Size	H: 17,1 cm, W: 20 cm, D: 10 cm,Shade Ø: 6 cm, Tilt angel: 90°
IP Class	IP20, Class 2 (Double insulated)
Light source	GU10 - not included, Max. 25W
	Can be dimmed by choosing a dimmable bulb

Features
Beautiful golden details
Adjustable, directional light
Slim design that is perfect also for smaller spaces

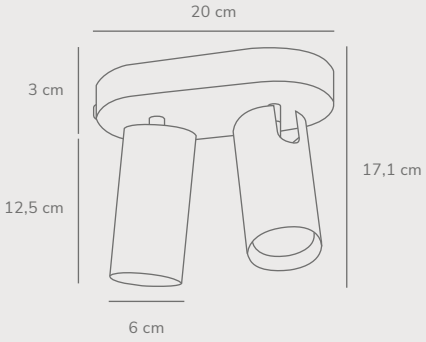

White 2120476001
Metal/Plastic

Black 2120476003
Metal/Plastic

Mimi 3-Spot Ceiling light *By Bønnelycke MDD*

Masterbox	Qty. 3
Size	H: 17,1 cm, W: 30 cm, D: 10 cm,Shade Ø: 6 cm, Tilt angel: 90°
IP Class	IP20, Class 2 (Double insulated)
Light source	GU10 - not included, Max. 25W
	Can be dimmed by choosing a dimmable bulb

Features
Beautiful golden details
Adjustable, directional light
Slim design that is perfect also for smaller spaces

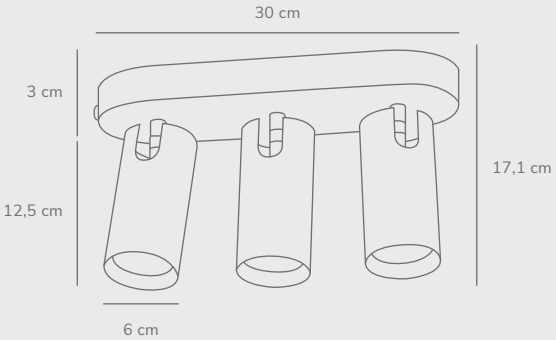

Product index

Model	*Number*	*Material*	*Color*	*Type*	*EAN*	*Energy class*	*Switch*	*Page*
Align	2120095001	Metal/Plastic	White	Table	5704924004117		On the cable	128
Align	2120095003	Metal/Plastic	Black	Table	5704924004124		On the cable	128
Align	2120095010	Metal/Plastic	Grey	Table	5704924004131		On the cable	128
Align	2120095033	Metal/Plastic	Chrome	Table	5704924013669		On the cable	128
Align	2120095018	Metal/Plastic	Brown	Table	5704924013676		On the cable	128
Align	2120095009	Metal/Plastic	Beige	Table	5704924013683		On the cable	128
Align	2120095023	Metal/Plastic	Green	Table	5704924013690		On the cable	128
Align	2120095057	Metal/Plastic	Rose	Table	5704924013706		On the cable	128
Angle Clamp	2220362010	Metal/Plastic	Grey	Clamp	5704924010002		On the cable	76
Angle Clamp	2220362001	Metal/Plastic	White/Telegrey	Clamp	5704924010200		On the cable	76
Angle Clamp	2220362003	Metal/Plastic	Black	Clamp	5704924010217		On the cable	76
Angle E27	2020673011	Metal/Plastic	Grey	Pendant	5704924003042			77
Angle E27	2020673001	Metal/Plastic	White/Telegrey	Pendant	5704924003028			77
Angle E27	2020673003	Metal/Plastic	Black	Pendant	5704924003035			77
Angle GU10	2120601010	Metal/Plastic	Grey	Wall	5704924004148		On the fixture	76
Angle GU10	2120601001	Metal/Plastic	White/Telegrey	Wall	5704924004162		On the fixture	76
Angle GU10	2120601003	Metal/Plastic	Black	Wall	5704924004155		On the fixture	76
Arcello	2220155061	Metal/Plastic	Brunished brass	Table	5704924010040		Under the base	128
Arcello	2220155050	Metal/Plastic	Anthracite	Table	5704924010187		Under the base	128
Arki	75145003	Metal/Plastic	Black	Table	5701581279872		On the fixture	129
Artist 25	83083010	Metal/Plastic	Grey	Pendant	5701581301085	E		114
Artist 25	83083009	Metal/Plastic	Beige	Pendant	5704924002458	E		114
Artist 25	83083030	Metal/Plastic	Copper	Pendant	5701581301184	E		114
Artist 25	83083003	Metal/Plastic	Black	Pendant	5701581345485	E		114
Artist 40	83093030	Metal/Plastic	Copper	Pendant	5701581301382	E		114
Artist 40	83093009	Metal/Plastic	Beige	Pendant	5704924002465	E		114
Artist 40	83093010	Metal/Plastic	Grey	Pendant	5701581301283	E		114
Artist 40	83093003	Metal/Plastic	Black	Pendant	5701581345584	E		114

Model	*Number*	*Material*	*Color*	*Type*	*EAN*	*Energy class*	*Switch*	*Page*
Aver 30	84243003	Metal/Plastic	Black	Pendant	5701581337183			115
Aver 40	84253003	Metal/Plastic	Black	Pendant	5701581337282			115
Aver 50	84263003	Metal/Plastic	Black	Pendant	5701581337381			116
Beau 100	2220483003	Metal/Metal	Black	Pendant	5704924010248			117
Beau 50	2220473003	Metal/Metal	Black	Pendant	5704924010194			116
Belly 29	45053003	Metal/Plastic	Black	Pendant	5701581359581			117
Belly 38	45063003	Metal/Plastic	Black	Pendant	5701581359680			118
Belly 46	45073003	Metal/Plastic	Black	Pendant	5701581359789			118
Blanche 32	2120753035	Metal/Plastic	Brass	Pendant	5704924004216			78
Blanche 42	2120773035	Metal/Plastic	Brass	Pendant	5704924004223			78
Blanche	2120794035	Metal/Plastic	Brass	Floor	5704924004230	E	On the fixture	79
Caché	2220275003	Marble/Metal	Matt black	Table	5704924009990		On the cable	129
Caché	2220275010	Marble/Metal	Matt grey	Table	5704924010088		On the cable	129
Darci	2120584003	Metal/Plastic	Black	Floor	5704924004261		On the cable	81
Darci	2120565003	Metal/Plastic	Black	Table	5704924004254		On the fixture	80
Darci	2120551003	Metal/Plastic	Black	Wall	5704924004247		On the fixture	80
Glossy	2020505001	Marble/Glass	Opal white	Table	5704924001024		On the cable	130
Glossy	2020505010	Marble/Glass	Grey	Table	5704924009358		On the cable	130
Hello	2220215010	Metal/Glass	Grey	Table	5704924009921		On the cable	130
Hello	2220215003	Metal/Glass	Black	Table	5704924010057		On the cable	130
Hello	2220215009	Metal/Glass	Brown	Table	5704924010125		On the cable	130
Hill	2220103060	Tyvek/Metal	White	Pendant	5704924009945			119
Kaito Dim	2220506010	Metal/Metal	Grey	Ceiling	5704924011399			134
Kaito Dim	2220506001	Metal/Metal	White	Ceiling	5704924011382			134
Kaito Pro 30	2220516003	Metal/Metal	Black	Ceiling	5704924011412	E		134
Kaito Pro 30	2220516001	Metal/Metal	White	Ceiling	5704924011405	E		134
Kaito Pro 40	2220526001	Metal/Metal	White	Ceiling	5704924011429	E		135
Kaito Pro 40	2220526003	Metal/Metal	Black	Ceiling	5704924011436	E		135

Model	*Number*	*Material*	*Color*	*Type*	*EAN*	*Energy class*	*Switch*	*Page*
Mademoiselles	2220405003	Marble/Metal	Black	Table	5704924010163		On the cable	131
Mademoiselles	2220405001	Marble/Metal	White	Table	5704924010170		On the cable	131
Maple	2220293003	Metal/Plastic	Black	Pendant	5704924010019			119
Maple	2220293009	Metal/Plastic	Brown	Pendant	5704924010262			119
Mib 6	2020666001	Metal/Plastic	White	Ceiling	5704924002427			82
Mib 6	2020666003	Metal/Plastic	Black	Ceiling	5704924002434			82
Mib 6	71704011	Metal/Plastic	Grey	Floor	5701581475984		On the fixture	83
Mib 6	71704003	Metal/Plastic	Black	Floor	5701581364387		On the fixture	83
Mib 6	71704001	Metal/Plastic	White	Floor	5701581364288		On the fixture	83
Mib 6	71679911	Metal/Plastic	Grey	Pendant	5701581475786			84
Mib 6	71679901	Metal/Plastic	White	Pendant	5701581332485			84
Mib 6	71679903	Metal/Plastic	Black	Pendant	5701581324084			84
Mib 6	71655003	Metal/Plastic	Black	Table	5701581364189		On the fixture	83
Mib 6	71655001	Metal/Plastic	White	Table	5701581364080		On the fixture	83
Mib 6	71655011	Metal/Plastic	Grey	Table	5701581475687		On the fixture	83
Mib 6	61681003	Metal/Plastic	Black	Wall	5704924000409		On wall base	82
Mib 6	61681011	Metal/Plastic	Grey	Wall	5701581475885		On wall base	82
Mib 6	61681001	Metal/Plastic	White	Wall	5704924000393		On wall base	82
Mimi 2-Spot	2120456001	Metal/Plastic	White	Ceiling	5704924004315			136
Mimi 2-Spot	2120456003	Metal/Plastic	Black	Ceiling	5704924004339			136
Mimi 3-Spot	2120476001	Metal/Plastic	White	Ceiling	5704924004322			136
Mimi 3-Spot	2120476003	Metal/Plastic	Black	Ceiling	5704924004346			136
Mobile	2120653001	Aluminium/Plastic	White	Pendant	5704924004186			120
Mobile	2120653003	Aluminium/Plastic	Black	Pendant	5704924004179			120
Navone 20	2220433001	Glass/Metal	White	Pendant	5704924010071			120
Navone 30	2220443001	Glass/Metal	White	Pendant	5704924010132			121
Nexus 2.0 Small	2020563003	Metal/Plastic	Black	Pendant	5704924002335			87
Nexus 2.0 Small	2020563001	Metal/Plastic	White/Telegrey	Pendant	5704924002328			87

Model	*Number*	*Material*	*Color*	*Type*	*EAN*	*Energy class*	*Switch*	*Page*
Nexus 2	2020644003	Metal/Plastic	Black	Floor	5704924002410		On the fixture	88
Nexus 2	2020644001	Metal/Plastic	White/Telegrey	Floor	5704924002403		On the fixture	88
Nexus 2	2020583001	Metal/Plastic	White/Telegrey	Pendant	5704924002342			87
Nexus 2	2020583003	Metal/Plastic	Black	Pendant	5704924002359			87
Nexus 2	2020625001	Metal/Plastic	White/Telegrey	Table	5704924002380		On the fixture	86
Nexus 2	2020625003	Metal/Plastic	Black	Table	5704924002397		On the fixture	86
Nexus 2	2020601003	Metal/Plastic	Black	Wall	5704924002373		On the fixture	86
Nexus 2	2020601001	Metal/Plastic	White/Telegrey	Wall	5704924002366		On the fixture	86
Nobu	2120405010	Metal/Plastic	Grey	Table	5704924000959		On the fixture	131
Nobu	2120405003	Metal/Plastic	Black	Table	5704924000942		On the fixture	131
Nomi	2220194003	Metal/Plastic	Black	Floor	5704924010231		On the fixture	90
Nomi	2220163003	Metal/Plastic	Black	Pendant	5704924013652			91
Nomi	2220171003	Metal/Plastic	Black	Wall	5704924009952		On the fixture	90
Nono 23,5	2120503001	Metal/Plastic	White	Pendant	5704924004285			122
Nono 23,5	2120503003	Metal/Plastic	Black	Pendant	5704924004308			122
Nono 49	2120523001	Metal/Plastic	White	Pendant	5704924004278			123
Nono 49	2120523003	Metal/Plastic	Black	Pendant	5704924004292			123
Norbi 30	2220133003	Metal/Plastic	Black	Pendant	5704924009938			122
Norbi 40	2220123003	Metal/Plastic	Black	Pendant	5704924010279			121
Nori 18	2120843001	Glass/Wood	White	Pendant	5704924006517			124
Nori 18	2120803030	Metal/Wood	Copper	Pendant	5704924005787			123
Nori 18	2120843047	Glass/Wood	Smoked	Pendant	5704924006524			124
Nori 18	2120803032	Metal/Wood	Brushed steel	Pendant	5704924005794			123
Nori 18	2120803003	Metal/Wood	Black	Pendant	5704924006470			123
Nori 18	2120803001	Metal/Wood	White	Pendant	5704924005770			123
Nori 27	2120853047	Glass/Wood	Smoked	Pendant	5704924006548			125
Nori 27	2120813003	Metal/Wood	Black	Pendant	5704924006487			124
Nori 27	2120813032	Metal/Wood	Brushed steel	Pendant	5704924005824			124

Model	*Number*	*Material*	*Color*	*Type*	*EAN*	*Energy class*	*Switch*	*Page*
Nori 27	2120813030	Metal/Wood	Copper	Pendant	5704924005817			124
Nori 27	2120813001	Metal/Wood	White	Pendant	5704924005800			124
Nori 27	2120853001	Glass/Wood	White	Pendant	5704924006531			125
Nori 39	2120823003	Metal/Wood	Black	Pendant	5704924006500			125
Nori 39	2120823001	Metal/Wood	White	Pendant	5704924006494			125
Nori 39	2120823030	Metal/Wood	Copper	Pendant	5704924005831			125
Nori 39	2120823032	Metal/Wood	Brushed steel	Pendant	5704924005848			125
Nuru	48275003	Plastic/Metal	Grey	Battery	5701581456280	F	Under the base	132
Nuru	48275058	Plastic/Metal	Rosegold	Battery	5701581456389	F	Under the base	132
Pure 20	43293001	Metal/Wood	White	Pendant	5701581394780			93
Pure 20	43293010	Metal/Wood	Grey	Pendant	5701581394988			93
Pure 20	43293003	Metal/Wood	Black	Pendant	5701581394889			93
Pure	78283003	Metal/Wood	Black	Pendant	5701581264588			92
Pure	78283001	Metal/Wood	White	Pendant	5701581264489			92
Pure	78283011	Metal/Wood	Grey	Pendant	5701581264687			92
Pure	78271011	Metal/Wood	Grey	Wall	5701581308480		On the fixture	92
Pure	78271003	Metal/Wood	Black	Wall	5701581308381		On the fixture	92
Pure	78271001	Metal/Wood	White	Wall	5701581308282		On the fixture	92
Raito 22	48013001	Glass/Metal	White/Brass	Pendant	5701581452985			94
Raito 22	48043001	Glass/Metal	White/Brass	Pendant	5701581453289			94
Raito 3-Arm	48053001	Glass/Metal	White/Brass	Pendant	5701581453388			96
Raito 30	48033001	Glass/Metal	Opal white	Pendant	5701581453180			95
Raito 30	48023001	Glass/Metal	Opal white	Pendant	5701581453081			95
Raito 5-Arm	48063001	Glass/Metal	White/Brass	Pendant	5701581453487			96
Raito	48084001	Glass/Metal	White/Brass	Floor	5701581453685		On the fixture	97
Raito	48075001	Glass/Metal	White/Brass	Table	5701581453586		On the fixture	97
Raito	48091001	Glass/Metal	Opal white	Wall	5701581453784		On the fixture	98
Shapes 22	2120013035	Glass/Metal	Brass	Pendant	5704924004070			100

Model	*Number*	*Material*	*Color*	*Type*	*EAN*	*Energy class*	*Switch*	*Page*
Shapes 27	2120023035	Glass/Metal	Brass	Pendant	5704924004087			100
Shapes	2120074035	Glass/Metal	Brass	Floor	5704924004100		On the cable	101
Shapes	2120055035	Glass/Metal	Brass	Table	5704924004094		On the cable	101
Stay 3-Spot	2120703003	Aluminium/Plastic	Black	Pendant	5704924004193			105
Stay 3-Spot	2120703010	Aluminium/Plastic	Grey	Pendant	5704924004209			105
Stay Short	2220381010	Metal/Plastic	Grey	Wall	5704924010064		On the fixture	102
Stay Short	2220381003	Metal/Plastic	Black	Wall	5704924010156		On the fixture	102
Stay	2020464010	Aluminium/Plastic	Grey	Floor	5704924001017		On the fixture	104
Stay	2020464003	Aluminium/Plastic	Black	Floor	5704924001000		On the fixture	104
Stay	48185010	Aluminium/Plastic	Grey	Table	5701581455283	F	On the fixture	103
Stay	2020445010	Aluminium/Plastic	Grey	Table	5704924000973		On the fixture	104
Stay	2020445003	Aluminium/Plastic	Black	Table	5704924000966		On the fixture	104
Stay	48185003	Aluminium/Plastic	Black	Table	5701581455382	F	On the fixture	103
Stay	2020455010	Aluminium/Plastic	Grey	Wall	5704924000997		On the fixture	103
Stay	48171003	Aluminium/Plastic	Black	Wall	5701581455184	F	On the fixture	102
Stay	2020455003	Aluminium/Plastic	Black	Wall	5704924000980		On the fixture	103
Stay	48171010	Aluminium/Plastic	Grey	Wall	5701581455085	F	On the fixture	102
Strap 15	84291003	Metal/Leather	Black	Wall	5701581364783		On the fixture	108
Strap 15	84291001	Metal/Leather	White	Wall	5701581364684		On the fixture	108
Strap 16	84303001	Metal/Leather	White	Pendant	5701581364882			108
Strap 16	84303003	Metal/Leather	Black	Pendant	5701581364981			108
Strap 16	2020025001	Glass/Metal	Brushed steel	Table	5704924000386		On the cable	106
Strap 27	84333001	Metal/Leather	White	Pendant	5701581337787			109
Strap 27	84333003	Metal/Leather	Black	Pendant	5701581337886			109
Strap 27	84333009	Metal/Leather	Beige	Pendant	5701581485389			109
Strap 27	84313001	Glass/Leather	White	Pendant	5701581337688			109
Strap 36	84343001	Metal/Leather	White	Pendant	5701581338180			109
Strap 36	84343009	Metal/Leather	Beige	Pendant	5701581485488			109

Model	*Number*	*Material*	*Color*	*Type*	*EAN*	*Energy class*	*Switch*	*Page*
Strap 36	84343003	Metal/Leather	Black	Pendant	5701581338289			109
Strap 48	84353003	Metal/Leather	Black	Pendant	5701581338685			110
Strap 48	84353009	Metal/Leather	Beige	Pendant	5701581485587			110
Strap 48	84353001	Metal/Leather	White	Pendant	5701581338586			110
Strap 68	84363003	Metal/Leather	Black	Pendant	5701581400689			110
Strap To Go	46195001	Plastic/Bamboo	White/Black	Battery	5701581452480	Exempt	On the base	106
Strap	46234001	Metal/Leather	White	Floor	5701581397286		On the fixture	107
Strap	46234003	Metal/Leather	Black	Floor	5701581397385		On the fixture	107
Strap	46205003	Metal/Leather	Black	Table	5701581397187		On the bulb base	107
Strap	46205001	Metal/Leather	White	Table	5701581397088		On the bulb base	107
Tullio	2220033003	Metal/Plastic	Black	Pendant	5704924009976			126
Tullio	2220033001	Metal/Plastic	White	Pendant	5704924010316			126
Versale	2220064003	Metal/Plastic	Black	Floor	5704924010224		On the cable	112
Versale	2220064001	Metal/Plastic	White	Floor	5704924010286		On the cable	112
Versale	2220053001	Metal/Plastic	White	Pendant	5704924009907			113
Versale	2220053003	Metal/Plastic	Black	Pendant	5704924010026			113
Versale	2220053009	Metal/Plastic	Brown	Pendant	5704924010309			113
Versale	2220075003	Metal/Plastic	Black	Table	5704924010101		On the cable	112
Versale	2220075001	Metal/Plastic	White	Table	5704924010293		On the cable	112

Der tages forbehold for ændringer m.h.t. tekniske specifikationer, design og collistørrelser.
Vi förbehåller oss för ändring med hänsyn till tekniske specifikationer, design och collistorlek.
We reserve the right to changes as to technical specifications, design and number of packages.
Wir nehmen Vorbehalt für Änderungen bezgl. technischer Spezifikationen, Design und Verpackungseinheiten.
Nous nous réservons le droit de modifier toute documentation technique, design et colisage.
We behouden ons het recht om technische specificaties, ontwerp en verpakkingsaantal te wijzigen zonder voorafgaande kennisgeving.

Showroom & Headquarters
Østre Havnegade 34
DK 9000 Aalborg
T + 45 98 18 16 11
nordlux@nordlux.com
nordlux.com

Benelux
T +32 (0)15 25 76 40
info@nordlux.com

France
T +33 320 479 346
france@nordlux.com

Germany
T +49 (0) 21 52 89 87 37
F +49 (0) 21 52 14 85 54
germany@nordlux.com

Norway
T +47 51 88 63 18
norway@nordlux.com

Sweden
T +46 (0) 20 14 00 054
sweden@nordlux.com

UK & Eire
T +44 (0) 12 00 42 27 77
salesuk@nordlux.com